ISSUE: Certificate of Appropriateness for alterations (small cell facility)

APPLICANT: AT&T Mobility

LOCATION: Old and Historic Alexandria District
Dominion Energy utility pole near 432 South Columbus Street

ZONE: CL/Commercial Low Zone

STAFF RECOMMENDATION

Staff recommends approval of the Certificate of Appropriateness, as submitted.

GENERAL NOTES TO THE APPLICANT

1. APPEAL OF DECISION: In accordance with the Zoning Ordinance, if the Board of Architectural Review denies or approves an application in whole or in part, the applicant or opponent may appeal the Board's decision to City Council on or before 14 days after the decision of the Board.

2. COMPLIANCE WITH BAR POLICIES: All materials must comply with the BAR's adopted policies unless otherwise specifically approved.

3. BUILDING PERMITS: Most projects approved by the Board of Architectural Review require the issuance of one or more construction permits by Department of Code Administration (including signs). The applicant is responsible for obtaining all necessary construction permits after receiving Board of Architectural Review approval. Contact Code Administration, Room 4200, City Hall, 703-746-4200 for further information.

4. ISSUANCE OF CERTIFICATES OF APPROPRIATENESS AND PERMITS TO DEMOLISH: Applicants must obtain a copy of the Certificate of Appropriateness or Permit to Demolish PRIOR to applying for a building permit. Contact BAR Staff, Room 2100, City Hall, 703-746-3833, or preservation@alexandriava.gov for further information.

5. EXPIRATION OF APPROVALS NOTE: In accordance with Sections 10-106(B), 10-206(B) and 10-307 of the Zoning Ordinance, any Board of Architectural Review approval will expire 12 months from the date of issuance if the work is not commenced and diligently and substantially pursued by the end of that 12-month period.

6. HISTORIC PROPERTY TAX CREDITS: Applicants performing extensive, certified rehabilitations of historic properties may separately be eligible for state and/or federal tax credits. Consult with the Virginia Department of Historic Resources (VDHR) prior to initiating any work to determine whether the proposed project may qualify for such credits.

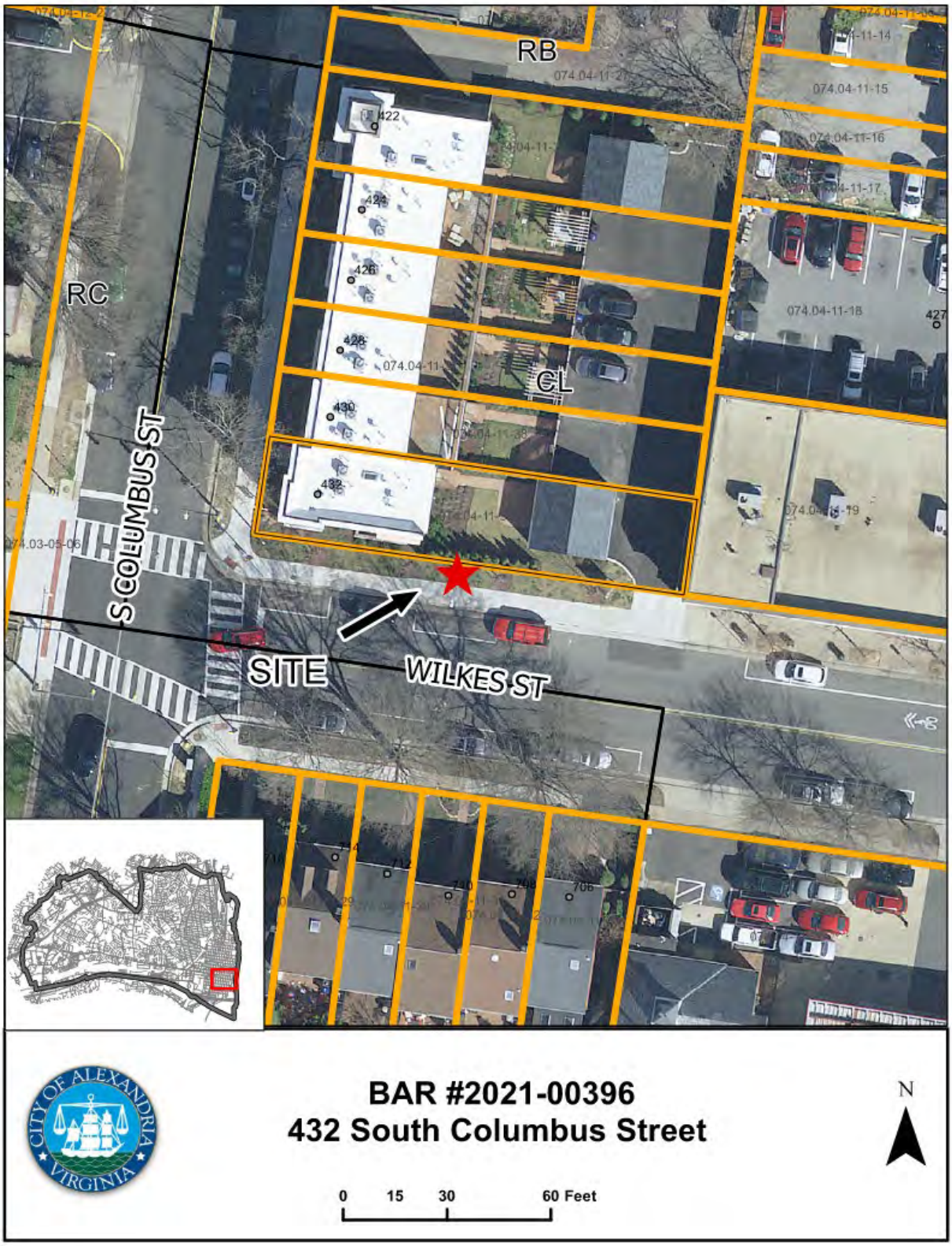
RB
RC
CL
S COLUMBUS ST
SITE
WILKES ST
074.04-11-15
074.04-11-16
074.04-11-18
074.03-05-06
422
424
426
428
430
432
427
CITY OF ALEXANDRIA VIRGINIA
BAR #2021-00396
432 South Columbus Street
N
0 15 30 60 Feet

I. APPLICANT'S PROPOSAL

The applicant is requesting a Certificate of Appropriateness to replace the existing concrete street light pole in the right-of-way near the property at 432 South Columbus Street with a taller metal pole on top of which a 5G small cell facility and a 4G antenna will be installed along with the associated equipment which will be mounted to the pole.

Certificate of Appropriateness

- Replace the existing 23'-0" tall concrete street light pole with a new 33'-0" HAPCO aluminum street light pole.
- Install a AT&T 5G small cell antenna facility strap mounted at 25'-0" above grade
- Install a 4G OMNI antenna on top of the pole, the overall antenna height is 6'-5"
- Install a RAYCAP 200 AMP meter box on the pole at 4'-6" from grade
- Remove the existing pole

Site context

The subject concrete pole is located near to the northeast corner of the intersection of South Columbus and Wilkes streets (Figure 1)

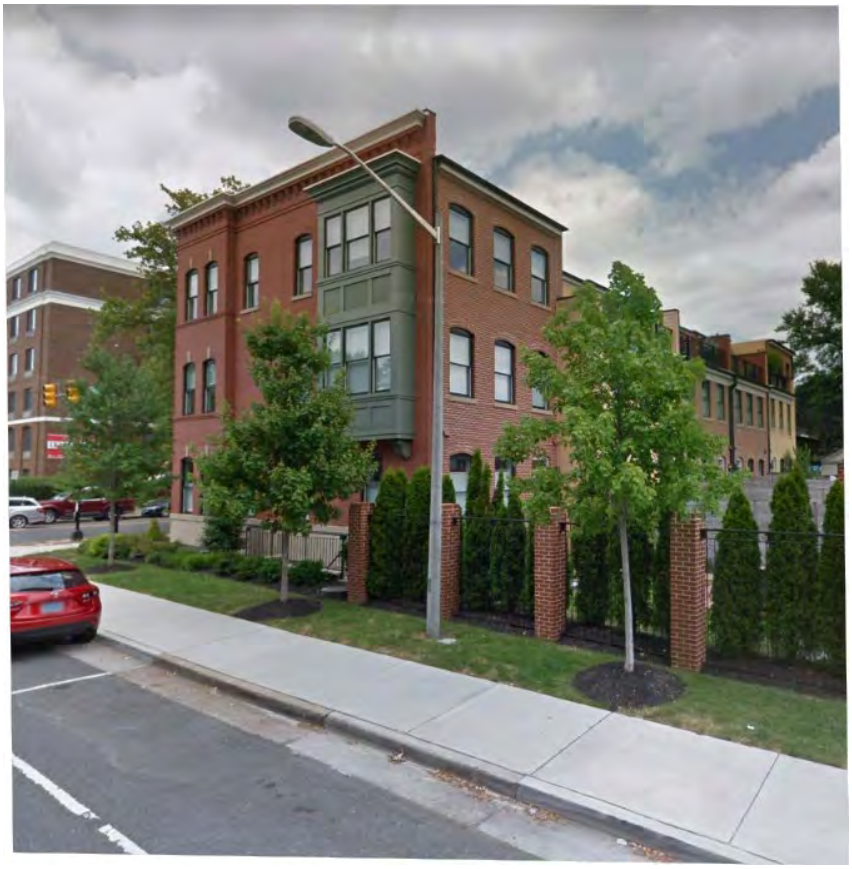

Figure 1 - Existing light concrete pole

II. HISTORY

The property at 432 South Columbus Street is a three-story townhouse built in **2016**. There is a six-story multifamily building built in 1976 on the northwest corner, a two-story townhouse on the southwest corner built in 1950, and a two-story townhouse built in 1984 on the southeast corner.

III. ANALYSIS

To address the growing demand for wireless services across the United States, telecommunication providers are increasing the capacity of their networks by deploying small cell antennas within the public right-of-way to reduce the data traffic load on roof-mounted equipment and larger cell towers. Small cell facilities are low-powered antennas that provide wireless service coverage to a limited geographic area (often with ranges of a few hundred feet) and are used to supplement and expand the coverage provided by the traditional, larger-scale network.

In the past three years, Federal and State legislation has been enacted to further streamline the local approval process for cellular facilities, shortening the approval time and limiting jurisdictions' authority. The laws can be contradictory between federal and state in some instances but do recognize that additional guidelines may be necessary in historic districts.

The City has adopted Interim Wireless Facility Aesthetic Guidelines for wireless infrastructure throughout the City which outline specific guidelines related to the replacement of existing utility poles, including:

- pole height may not increase more than 10 feet and may not exceed 50 feet without a special use permit
- replacement poles must be in the same general location as the existing pole
- replacement poles may not cause the removal of an existing tree or cause damaging impacts to trees located in the right-of-way
- wireless facilities must be shrouded, enclosing wires and equipment, and no separate ground mounted equipment is permitted
- wireless facilities must be painted to match the infrastructure

A Certificate of Appropriateness is required in the historic districts under Section 10-103(A) of the Zoning Ordinance, which state that "No building or structure shall be erected, reconstructed, altered or restored within the Old and Historic Alexandria District unless and until an application for a certificate of appropriateness shall have been approved…"

The proposed pole design is the A-8 Metal Light Pole Replacement with 4G and 5G Configuration approved by the City Council in December 2020 (Figure 2).

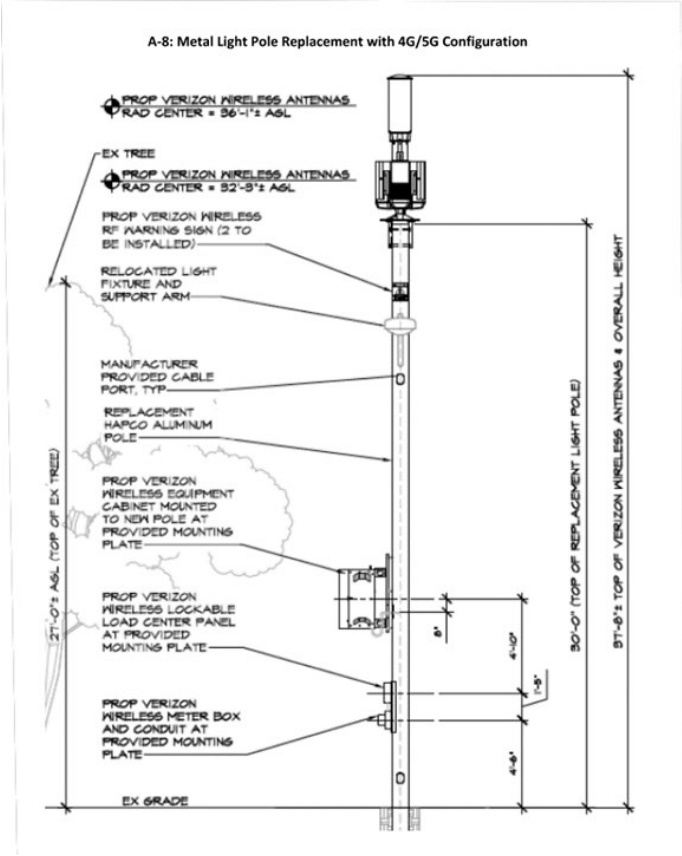

Figure 2 - Design A-8 approved by the City Council

The overall height of the new pole including the small cell facility is 38'-5". BAR staff has no objection to the taller metal pole or the installation of the small cell facility in this location and finds that painting the equipment the same color as the pole will make them less obvious. The existence of utility poles and overhead wires, street signs, and light poles are part of the urban streetscape, and staff does not believe that the installation of the taller pole with the small cell equipment will adversely impact existing viewsheds.

Therefore, staff recommends approval of the Certificate of Appropriateness as submitted.

STAFF
Marina Novaes, Historic Preservation Planner, Planning & Zoning
Tony LaColla, AICP, Land Use Services Division Chief, Planning & Zoning

IV. CITY DEPARTMENT COMMENTS

Legend: C- code requirement R- recommendation S- suggestion F- finding

Zoning
F-1 Height of the pole shall not exceed 50.00 feet without a Special Use Permit.
Pole height is 33' feet and overall height is 38' 5"

F-2 Pole must be in the same general location as existing pole.
This will be a new pole to replace an existing concrete pole in same location.

F-3 The pole is not located in a manner that requires the removal of an existing tree or impacts of root zone.
Pole will sit between two young trees.

F-4 Pole shall be located that meets ADA requirements that do not impede or hinder pedestrian or vehicular travel.
In Compliance

F-5 Wireless facility shall be painted to match similar infrastructure on the block or earth tone color.
plans indicate facility to be a metal pole

<u>Code Administration</u>
Code Administration has no comments

<u>Transportation and Environmental Services</u>
R-1 The building permit must be approved and issued prior to the issuance of any permit for demolition, if a separate demolition permit is required. (T&ES)

R-2 Applicant shall be responsible for repairs to the adjacent city right-of-way if damaged during construction activity. (T&ES)

R-3 No permanent structure may be constructed over any existing private and/or public utility easements. It is the responsibility of the applicant to identify any and all existing easements on the plan. (T&ES)

F-1 After review of the information provided, an approved grading plan is not required at this time. Please note that if any changes are made to the plan it is suggested that T&ES be included in the review. (T&ES)

F-2 If the alley located at the rear of the parcel is to be used at any point of the construction process the following will be required:
For a Public Alley - The applicant shall contact T&ES, Construction Permitting & Inspections at (703) 746-4035 to discuss any permits and accommodation requirements that will be required.
For a Private Alley - The applicant must provide proof, in the form of an affidavit at a minimum, from owner of the alley granting permission of use. (T&ES)

C-1 The applicant shall comply with the City of Alexandria's Solid Waste Control, Title 5, Chapter 1, which sets forth the requirements for the recycling of materials (Sec. 5-1-99). (T&ES)

C-2 The applicant shall comply with the City of Alexandria's Noise Control Code, Title 11, Chapter 5, which sets the maximum permissible noise level as measured at the property line. (T&ES)

C-3 All secondary utilities serving this site shall be placed underground. (Sec. 5-3-3) (T&ES)

C-4 Any work within the right-of-way requires a separate permit from T&ES. (Sec. 5-2) (T&ES)

C-5 All improvements to the city right-of-way such as curbing, sidewalk, driveway aprons, etc. must be city standard design. (Sec. 5-2-1) (T&ES)

Alexandria Archaeology

F-1 No archaeological oversight necessary.

V. ATTACHMENTS

1 – Application Materials
2 – Supplemental Materials

BAR Case # _____

ADDRESS OF PROJECT: 432 S Columbus St

DISTRICT: ☑ **Old & Historic Alexandria** ☐ **Parker – Gray** ☐ **100 Year Old Building**

TAX MAP AND PARCEL: 074. 04-11-39 **ZONING:** CL

APPLICATION FOR: *(Please check all that apply)*

☑ CERTIFICATE OF APPROPRIATENESS

☐ PERMIT TO MOVE, REMOVE, ENCAPSULATE OR DEMOLISH
(Required if more than 25 square feet of a structure is to be demolished/impacted)

☐ WAIVER OF VISION CLEARANCE REQUIREMENT and/or YARD REQUIREMENTS IN A VISION CLEARANCE AREA (Section 7-802, Alexandria 1992 Zoning Ordinance)

☐ WAIVER OF ROOFTOP HVAC SCREENING REQUIREMENT
(Section 6-403(B)(3), Alexandria 1992 Zoning Ordinance)

Applicant: ☐ Property Owner ☑ Business *(Please provide business name & contact person)*

Name: AT&T Mobility

Address: 7150 Standard Drive

City: Hanover State: VA Zip: 21076

Phone: _____ E-mail : _____

Authorized Agent *(if applicable)*: ☐ Attorney ☐ Architect ☑ Contractor

Name: Smartlink Phone: 301-509-5518

E-mail: brian.taylor@smartlinkgroup.com

Legal Property Owner:

Name: Dominion Energy

Address: 3072 Centreville Road

City: Herndon State: VA Zip: 20171

Phone: _____ E-mail: austin.d.gore@dominionenergy.com

☐ **Yes** ☑ **No** Is there an historic preservation easement on this property?
☐ **Yes** ☐ **No** If yes, has the easement holder agreed to the proposed alterations?
☐ **Yes** ☑ **No** Is there a homeowner's association for this property?
☐ **Yes** ☐ **No** If yes, has the homeowner's association approved the proposed alterations?

If you answered yes to any of the above, please attach a copy of the letter approving the project.

BAR Case # _____

NATURE OF PROPOSED WORK: *Please check all that apply*

☐ NEW CONSTRUCTION
☑ EXTERIOR ALTERATION: *Please check all that apply.*

☐ awning	☐ fence, gate or garden wall	☐ HVAC equipment	☐ shutters
☐ doors	☐ windows	☐ siding	☐ shed
☐ lighting	☐ pergola/trellis	☐ painting unpainted masonry	

☑ other - Metal street light pole/Small Cell installation

☐ ADDITION
☐ DEMOLITION/ENCAPSULATION
☐ SIGNAGE

DESCRIPTION OF PROPOSED WORK: *Please describe the proposed work in detail (Additional pages may be attached).*

Description of Work
Replacing an existing concrete street light pole for the purposes of installing 4G and 5G antennas and related equipment to a replacement Dominion owned metal (HAPCO) street light pole.

Antennas
We will be installing both 4G and 5G antennas to the replacement pole.

Existing pole height and material.
All 3 of the existing poles are concrete. ALEXA_14 (4501 Ford Ave) has an existing height of 27'-ALEXA_021 (300 N Washington St) has an existing height of 30'-and ALEXA_045 (432 South Columbus St) has an existing height of 23'

SUBMITTAL REQUIREMENTS:

Items listed below comprise the **minimum supporting materials** for BAR applications. Staff may request additional information during application review. Please refer to the relevant section of the *Design Guidelines* for further information on appropriate treatments.

Applicants must use the checklist below to ensure the application is complete. Include all information and material that are necessary to thoroughly describe the project. Incomplete applications will delay the docketing of the application for review. Pre-application meetings are required for all proposed additions. All applicants are encouraged to meet with staff prior to submission of a completed application.

Electronic copies of submission materials should be submitted whenever possible.

Demolition/Encapsulation : *All applicants requesting 25 square feet or more of demolition/encapsulation must complete this section. Check N/A if an item in this section does not apply to your project.*

	N/A	
☐	☐	Survey plat showing the extent of the proposed demolition/encapsulation.
☐	☐	Existing elevation drawings clearly showing all elements proposed for demolition/encapsulation.
☐	☐	Clear and labeled photographs of all elevations of the building if the entire structure is proposed to be demolished.
☐	☐	Description of the reason for demolition/encapsulation.
☐	☐	Description of the alternatives to demolition/encapsulation and why such alternatives are not considered feasible.

BAR Case # _____

Additions & New Construction: *Drawings must be to scale and should not exceed 11" x 17" unless approved by staff. All plans must be folded and collated into 3 complete 8 1/2" x 11" sets. Additional copies may be requested by staff for large-scale development projects or projects fronting Washington Street. Check N/A if an item in this section does not apply to your project.*

	N/A	
☐	☐	Scaled survey plat showing dimensions of lot and location of existing building and other structures on the lot, location of proposed structure or addition, dimensions of existing structure(s), proposed addition or new construction, and all exterior, ground and roof mounted equipment.
☐	☐	FAR & Open Space calculation form.
☐	☐	Clear and labeled photographs of the site, surrounding properties and existing structures, if applicable.
☐	☐	Existing elevations must be scaled and include dimensions.
☐	☐	Proposed elevations must be scaled and include dimensions. Include the relationship to adjacent structures in plan and elevations.
☐	☐	Materials and colors to be used must be specified and delineated on the drawings. Actual samples may be provided or required.
☐	☐	Manufacturer's specifications for materials to include, but not limited to: roofing, siding, windows, doors, lighting, fencing, HVAC equipment and walls.
☐	☐	For development site plan projects, a model showing mass relationships to adjacent properties and structures.

Signs & Awnings: *One sign per building under one square foot does not require BAR approval unless illuminated. All other signs including window signs require BAR approval. Check N/A if an item in this section does not apply to your project.*

	N/A	
☐	☐	Linear feet of building: Front:_____Secondary front (if corner lot):_____.
☐	☐	Square feet of existing signs to remain:_____.
☐	☐	Photograph of building showing existing conditions.
☐	☐	Dimensioned drawings of proposed sign identifying materials, color, lettering style and text.
☐	☐	Location of sign (show exact location on building including the height above sidewalk).
☐	☐	Means of attachment (drawing or manufacturer's cut sheet of bracket if applicable).
☐	☐	Description of lighting (if applicable). Include manufacturer's cut sheet for any new lighting fixtures and information detailing how it will be attached to the building's facade.

Alterations: *Check N/A if an item in this section does not apply to your project.*

	N/A	
☑	☐	Clear and labeled photographs of the site, especially the area being impacted by the alterations, all sides of the building and any pertinent details.
☐	☑	Manufacturer's specifications for materials to include, but not limited to: roofing, siding, windows, doors, lighting, fencing, HVAC equipment and walls.
☑	☐	Drawings accurately representing the changes to the proposed structure, including materials and overall dimensions. Drawings must be to scale.
☐	☑	An official survey plat showing the proposed locations of HVAC units, fences, and sheds.
☐	☑	Historic elevations or photographs should accompany any request to return a structure to an earlier appearance.

BAR Case # _____

ALL APPLICATIONS: *Please read and check that you have read and understand the following items:*

☑ I have submitted a filing fee with this application. (Checks should be made payable to the City of Alexandria. Please contact staff for assistance in determining the appropriate fee.)

☐ I understand the notice requirements and will return a copy of the three respective notice forms to BAR staff at least five days prior to the hearing. If I am unsure to whom I should send notice I will contact Planning and Zoning staff for assistance in identifying adjacent parcels.

☑ I, the applicant, or an authorized representative will be present at the public hearing.

☑ I understand that any revisions to this initial application submission (including applications deferred for restudy) must be accompanied by the BAR Supplemental form and 3 sets of revised materials.

The undersigned hereby attests that all of the information herein provided including the site plan, building elevations, prospective drawings of the project, and written descriptive information are true, correct and accurate. The undersigned further understands that, should such information be found incorrect, any action taken by the Board based on such information may be invalidated. The undersigned also hereby grants the City of Alexandria permission to post placard notice as required by Article XI, Division A, Section 11-301(B) of the 1992 Alexandria City Zoning Ordinance, on the property which is the subject of this application. The undersigned also hereby authorizes the City staff and members of the BAR to inspect this site as necessary in the course of research and evaluating the application. The applicant, if other than the property owner, also attests that he/she has obtained permission from the property owner to make this application.

APPLICANT OR AUTHORIZED AGENT:

Signature: Brian Taylor

Printed Name: Brian Taylor

Date: 07/22/21

OWNERSHIP AND DISCLOSURE STATEMENT
Use additional sheets if necessary

1. Applicant. State the name, address and percent of ownership of any person or entity owning an interest in the applicant, unless the entity is a corporation or partnership, in which case identify each owner of more than three percent. The term ownership interest shall include any legal or equitable interest held at the time of the application in the real property which is the subject of the application.

Name	Address	Percent of Ownership
1. AT&T Mobility	7150 Standard Drive	100%
2.		
3.		

2. Property. State the name, address and percent of ownership of any person or entity owning an interest in the property located at_____(address), unless the entity is a corporation or partnership, in which case identify each owner of more than three percent. The term ownership interest shall include any legal or equitable interest held at the time of the application in the real property which is the subject of the application.

Name	Address	Percent of Ownership
1. Dominion Energy	220 N Washington St	100%
2.		
3.		

3. Business or Financial Relationships. Each person or entity listed above (1 and 2), with an ownership interest in the applicant or in the subject property is required to disclose **any** business or financial relationship, as defined by Section 11-350 of the Zoning Ordinance, existing at the time of this application, or within the12-month period prior to the submission of this application with any member of the Alexandria City Council, Planning Commission, Board of Zoning Appeals or either Boards of Architectural Review.

Name of person or entity	Relationship as defined by Section 11-350 of the Zoning Ordinance	Member of the Approving Body (i.e. City Council, Planning Commission, etc.)
1. Brian Taylor	N/A	N/A
2.		
3.		

NOTE: Business or financial relationships of the type described in Sec. 11-350 that arise after the filing of this application and before each public hearing must be disclosed prior to the public hearings.

As the applicant or the applicant's authorized agent, I hereby attest to the best of my ability that the information provided above is true and correct.

7/22/2o2ı	Brian Taylor	Brian Taylor
Date	Printed Name	Signature

smartlink

1362 Mellon Road, Suite 140
Hanover, MD 21076

FA # 14857031 / SITE ID # 269178
CRAN_RWSH_ALEXA_045G

711 WILKES STREET ALEXANDRIA, VA 22314

Prepared for
AT&T Mobility
7150 Standard Drive
Hanover, MD 21076

at&t Mobility

Satellite View

Existing Sector 1 View

Proposed Sector 1 View

PROPOSED AT&T CONCEALMENT ENCLOSURE W/OMNI ANTENNA & RRH MOUNTED ON PROPOSED UTILITY POLE. CENTERLINE OF PROPOSED AT&T POLE TOP CONCEALMENT @ ELEVATION = 34'-8" AGL. PAINTED TO MATCH.

PROPOSED AT&T 5G ANTENNA ON STRAP MOUNT POLE KIT MOUNTED ON PROPOSED UTILITY POLE. CENTERLINE OF PROPOSED AT&T 5G ANTENNA @ ELEVATION = 25'-0" AGL. PAINTED TO MATCH.

PROPOSED RAYCAP 200 AMP METER/ 100 AMP DISCONNECT COMBO KIT MOUNTED TO PROPOSED UTILITY POLE. CENTERLINE OF PROPOSED RAYCAP METER/ DISCONNECT COMBO KIT @ ELEVATION = 4'-6" AGL. PAINTED TO MATCH.

smartlink
1362 Mellon Road, Suite 140
Hanover, MD 21076

CRAN_RWSH_ALEXA_045G
NODE FA #: 14857031 / HUB FA #: 14510358 / USID #: 269178
711 WILKES STREET
ALEXANDRIA, VA 22314

Prepared for
AT&T Mobility
7150 Standard Drive
Hanover, MD 21076

at&t Mobility

EXISTING VIEW

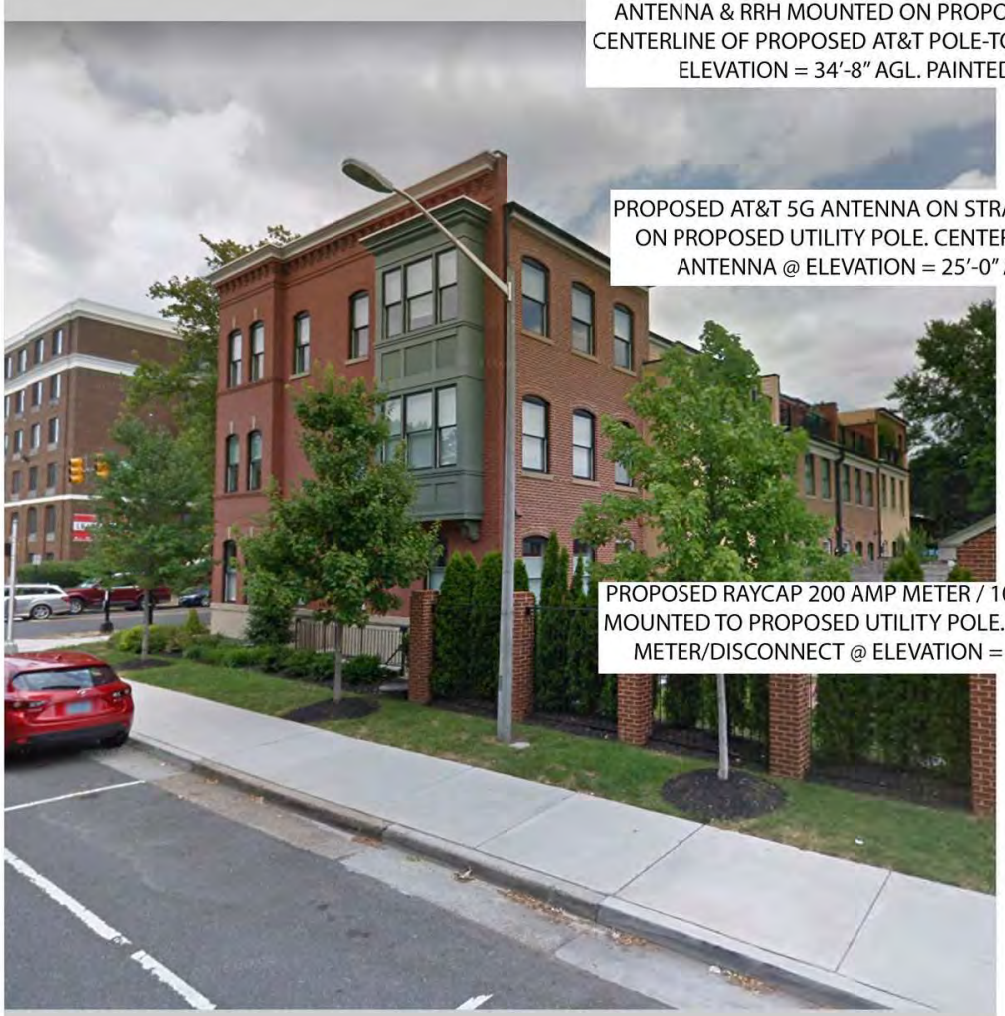

PROPOSED VIEW

CRAN_RWSH_ALEXA_045G

NODE FA #: 14857031
HUB FA #: 14510358
USID #: 269178
432 SOUTH COLUMBUS STREET
ALEXANDRIA, VA 22314

DOMINION POLE ID# C1014 TG76

PROJECT SUMMARY

SITE NAME:	CRAN_RWSH_ALEXA_045G
SITE ADDRESS:	432 SOUTH COLUMBUS STREET ALEXANDRIA, VA 22314
LATITUDE:	38.80069° N
LONGITUDE:	-77.04874° W
COUNTY: ZONING:	ALEXANDRIA CITY COMMERCIAL
POWER COMPANY:	DOMINION ENERGY
FIBER COMPANY:	VERIZON
SITE LOCATION:	RIGHT-OF-WAY (R.O.W)
USE & OCCUPANCY GROUP:	U
GROUND ELEVATION: STRUCTURE TYPE: STRUCTURE HEIGHT:	20.6' WSS (HAPCO METAL POLE) 38'-5"
STRUCTURAL OWNER: STRUCTURAL CONTACT:	DOMINION ENERGY AUSTIN GORE 3072 CENTERVILLE ROAD HERNDON, VA 20171 (571) 203-5259 austin.d.gore@dominionenergy.com
NJUNS #:	4513708

PROJECT TEAM

APPLICANT:	AT&T MOBILITY 7150 STANDARD DRIVE HANOVER, MD 21076
CONTACT: PHONE:	SEAN MITCHELL 410-440-0072
PROJECT MANAGEMENT FIRM	SMARTLINK 1362 MELLON ROAD, SUITE 140 HANOVER, MD 21076
CONTACT: PHONE:	ALEX MILLER 410-582-8043 x133
A&E FIRM: CONTACT: PHONE:	TRYLON TSF OLIVER RADACK 1-855-669-5421

CODE COMPLIANCE

ALL WORK SHALL BE PERFORMED AND MATERIALS INSTALLED IN ACCORDANCE WITH THE CURRENT EDITIONS OF THE FOLLOWING CODES AS ADOPTED BY THE LOCAL GOVERNING AUTHORITIES. NOTHING IN THESE PLANS IS TO BE CONSTRUED TO PERMIT WORK NOT CONFORMING TO THESE CODES:

CODE TYPE:	CODE:
BUILDING/DWELLING	IBC 2015
STRUCTURAL	IBC 2015
ELECTRICAL	NEC 2014
2012 NFPA 101, LIFE SAFETY CODE	
2009 IFC	
AT&T JOB AIDE	

VICINITY MAP

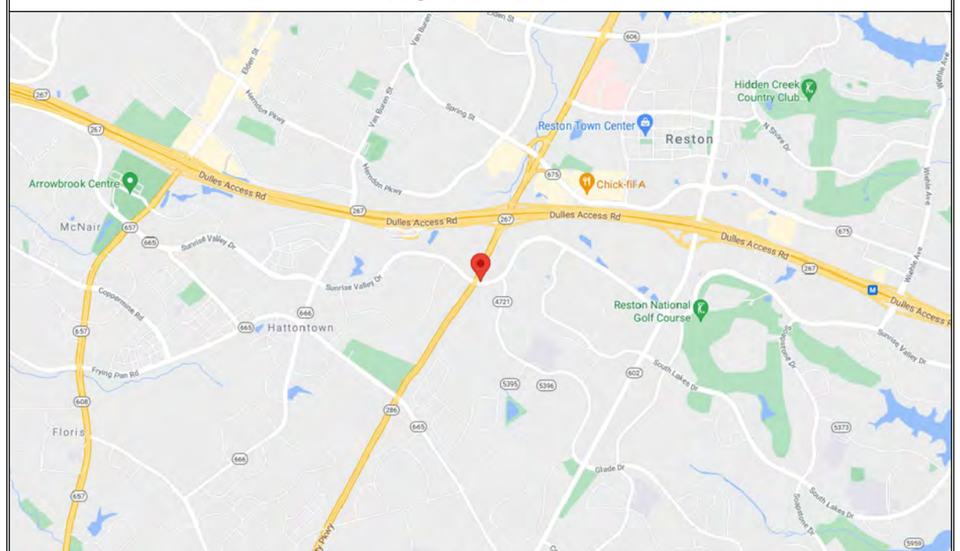

SCALE : 1" = 4000'-0"

PROJECT DESCRIPTION

THE PROPOSED AT&T PROJECT INCLUDES:

1. REPLACE EXISTING LIGHT POLE WITH PROPOSED WSS (HAPCO METAL POLE)
2. INSTALL PROPOSED LUMINAIRE
3. INSTALL PROPOSED 200 AMP METER/100 AMP DISCONNECT COMBO ENCLOSURE
4. INSTALL RF HYBRID CABLE INSIDE METAL STREET LIGHT
5. INSTALL POLE TOP MOUNTING KIT
7. INSTALL EQUIPMENT CONCEALMENT SHROUD
8. INSTALL (1) RRH UNITS INSIDE NEW CONCEALMENT SHROUD
9. INSTALL GALTRONICS OMNI ANTENNA
10. INSTALL 5G ANTENNAS
11. INSTALL JUMPERS FROM (1) RRH UNITS TO NEW ANTENNA

DO NOT SCALE DRAWINGS

ALL DRAWINGS CONTAINED HEREIN ARE FORMATTED FOR 11x17.
CONTRACTOR SHALL VERIFY ALL PLANS AND EXISTING DIMENSIONS AND CONDITIONS ON THE JOB SITE AND SHALL IMMEDIATELY NOTIFY THE ENGINEER IN WRITING OF ANY DISCREPANCIES BEFORE PROCEEDING WITH THE WORK OR BE RESPONSIBLE FOR SAME.

SEE SHEET GN-1 FOR ADDITIONAL CONSTRUCTION NOTES

DRAWING INDEX

SHEET #	SHEET DESCRIPTION
T-1	TITLE SHEET
GN-1	GENERAL NOTES
ROW	RIGHT OF WAY SURVEY
SP-1	SITE PLAN
C-1	EXISTING ELEVATION VIEW
C-2	PROPOSED ELEVATION VIEW
C-3	EQUIPMENT DETAILS
C-4	EQUIPMENT DETAILS CONT.
C-5	PLUMBING DIAGRAM
C-6	HAPCO POLE DETIALS
C-7	HAPCO POLE DETIALS
C-8	5G EQUIPMENT DETAILS
E-1	AC PANEL INFORMATION
E-2	ELECTRICAL NOTES
E-3	ELECTRICAL DETAILS
E-4	ELECTRICAL DETAILS CONT.

A/E DOCUMENT REVIEW STATUS

TITLE	SIGNATURE	DATE
CARRIER CONSTRUCTION MGR:		
SMARTLINK PM:		
RF ENGINEER:		
ZONING APPROVAL:		
SITE ACQUISITION:		
PROPERTY OWNER:		

STATUS CODE:

1		ACCEPTED: WITH OR NO COMMENTS, CONSTRUCTION MAY PROCEED
2		NOT ACCEPTED: RESOLVE COMMENTS AND RESUBMIT

ACCEPTANCE DOES NOT CONSTITUTE APPROVAL OF DESIGN, CALCULATIONS, ANALYSIS, TEST METHODS OF MATERIALS DEVELOPED OR SELECTED BY THE SUBCONTRACTOR AND DOES NOT RELIEVE SUBCONTRACTOR FROM FULL COMPLIANCE WITH CONTRACTUAL OBLIGATIONS.

CALL MISS UTILITY
(800) 245-4848
CALL 3 WORKING DAYS BEFORE YOU DIG!

AT&T

smartlink

Trylon
1825 W. WALNUT HILL LANE, SUITE 120
IRVING, TEXAS 75038
1-855-669-5421

SUBMITTALS

REV	DATE	DESCRIPTION	BY
1	05/27/20	CLIENT COMMENTS	DB

RELEASED BY	DATE
MATTHEW JAMERSON	05/27/21

COMMONWEALTH OF VIRGINIA
MATTHEW K. JAMERSON
Lic. No. 0402061949
PROFESSIONAL ENGINEER

UNAUTHORIZED ALTERATION OR ADDITIONS TO A PLAN BEARING THE SEAL OF A LICENSED ENGINEER OR LAND SURVEYOR IS A VIOLATION OF LOCAL LAW

PROFESSIONAL CERTIFICATION. I HEREBY CERTIFY THAT THESE DOCUMENTS WERE PREPARED OR APPROVED BY ME, AND THAT I AM A DULY LICENSED PROFESSIONAL ENGINEER UNDER THE LAWS OF THE STATE OF VIRGINIA, LICENSE NO. 0402061949 EXP. 03/12/2022

ORIGINAL SIZE IN INCHES

SITE INFORMATION

AT&T NEW CRAN BUILD

SITE ADDRESS

CRAN_RWSH_ALEXA_045G
432 SOUTH COLUMBUS STREET
ALEXANDRIA, VA 22314

SHEET TITLE

TITLE SHEET

SHEET NUMBER

T-1

PROJECT COMPLIANCE NOTES:

1. THE PROPOSED FACILITY WILL BE UNMANNED AND DOES NOT REQUIRE POTABLE WATER OR SEWER SERVICE AND IS NOT FOR HUMAN HABITAT.
(NO HANDICAP ACCESS IS REQUIRED).
2. OCCUPANCY IS LIMITED TO PERIODIC MAINTENANCE AND INSPECTION, APPROXIMATELY 2 TIMES PER MONTH, BY AT&T TECHNICIANS.
3. NO NOISE, SMOKE, DUST OR ODOR WILL RESULT FROM THIS PROPOSAL, UNLESS DURING EMERGENCY.
4. OUTDOOR STORAGE AND SOLID WASTE CONTAINERS ARE NOT PROPOSED.
5. ALL MATERIAL SHALL BE FURNISHED AND WORK SHALL BE PERFORMED IN ACCORDANCE WITH THE LATEST AT&T SYSTEM GROUNDING STANDARDS. "TECHNICAL SPECIFICATION FOR CONSTRUCTION OF LTE SITES AND WILL FOLLOW AT&T GROUNDING AND BONDING REQUIREMENTS FOR NETWORK FACILITIES AT&T DOC ID ATT-TP-76416 AND AT&T POLICY LETTER ATT-CEM-13002.
6. THE CONTRACTOR SHALL BE RESPONSIBLE FOR REPAIRING ANY DAMAGE CAUSED DURING CONSTRUCTION OPERATION.
7. THE CONTRACTOR SHALL REMOVE ALL TRASH AND DEBRIS FROM THE SITE ON A DAILY BASIS.
8. INFORMATION SHOWN ON THESE DRAWINGS WAS OBTAINED FROM DRAWINGS PROVIDED BY THE APPLICANT REPRESENTATIVE. THE CONTRACTOR SHALL NOTIFY TURF VENDOR OF ANY DISCREPANCIES PRIOR TO ORDERING MATERIAL OR PROCEEDING WITH CONSTRUCTION.
9. NO ADDITIONAL PARKING IS PROPOSED. EXISTING ACCESS AND PARKING WILL BE USED.
10. NO ADDITIONAL LANDSCAPING IS PROPOSED AT THIS SITE.
11. ALL COAXIAL CABLE/FIBER AND DC CABLE INSTALLATION IS TO FOLLOW MANUFACTURER'S INSTRUCTION.

GREENFIELD GROUNDING NOTES:

ALL GROUND ELECTRODE SYSTEMS (INCLUDING TELECOMMUNICATION, RADIO, LIGHTNING PROTECTION AND AC POWER GES'S) SHALL BE BONDED TOGETHER AT OR BELOW GRADE, BY TWO OR MORE COPPER BONDING CONDUCTORS IN ACCORDANCE WITH THE NEC.

THE SUBCONTRACTOR SHALL PERFORM IEEE FALL-OF-POTENTIAL RESISTANCE TO EARTH TESTING (PER IEEE 1100 AND 81) FOR GROUND ELECTRODE SYSTEMS, THE SUBCONTRACTOR SHALL FURNISH AND INSTALL SUPPLEMENTAL GROUND ELECTRODES AS NEEDED TO ACHIEVE A TEST RESULT OF 5 OHMS OR LESS.

THE SUBCONTRACTOR IS RESPONSIBLE FOR PROPERLY SEQUENCING GROUNDING AND UNDERGROUND CONDUIT INSTALLATION AS TO PREVENT ANY LOSS OF CONTINUITY IN THE GROUNDING SYSTEM OR DAMAGE TO THE CONDUIT AND PROVIDE TESTING RESULTS.

METAL CONDUIT AND TRAY SHALL BE GROUNDED AND MADE ELECTRICALLY CONTINUOUS WITH LISTED BONDING FITTINGS OR BY BONDING ACROSS THE DISCONTINUITY WITH #6 AWG COPPER WIRE UL APPROVED GROUNDING TYPE CONDUIT CLAMPS.

METAL RACEWAY SHALL NOT BE USED AS THE NEC REQUIRED EQUIPMENT GROUND CONDUCTOR. STRANDED COPPER CONDUCTORS WITH GREEN INSULATION, SIZED IN ACCORDANCE WITH THE NEC, SHALL BE FURNISHED AND INSTALLED WITH THE POWER CIRCUITS TO BTS EQUIPMENT.

EACH BTS CABINET FRAME SHALL BE DIRECTLY CONNECTED TO THE MASTER GROUND BAR WITH GREEN INSULATED SUPPLEMENTAL EQUIPMENT GROUND WIRES, 6 AWG STRANDED COPPER OR LARGER FOR INDOOR BTS; #2 AWG SOLID TINNED COPPER FOR OUTDOOR BTS.

CONNECTIONS TO THE GROUND BAR SHALL NOT BE DOUBLED UP OR STACKED BACK TO BACK CONNECTIONS ON OPPOSITE SIDE OF THE GROUND BAR ARE PERMITTED.

ALL EXTERIOR GROUND CONDUCTORS BETWEEN EQUIPMENT/GROUND BARS AND THE GROUND RING SHALL BE #2 AWG SOLID TINNED COPPER UNLESS OTHERWISE INDICATED.

ALUMINUM CONDUCTOR OR COPPER CLAD STEEL CONDUCTOR SHALL NOT BE USED FOR GROUNDING CONNECTIONS.

USE OF 90° BENDS IN THE PROTECTION GROUNDING CONDUCTORS SHALL BE AVOIDED WHEN 45° BENDS CAN BE ADEQUATELY SUPPORTED.

EXOTHERMIC WELDS SHALL BE USED FOR ALL GROUNDING CONNECTIONS BELOW GRADE.

ALL GROUND CONNECTIONS ABOVE GRADE (INTERIOR AND EXTERIOR) SHALL BE FORMED USING HIGH PRESS CRIMPS.

COMPRESSION GROUND CONNECTIONS MAY BE REPLACED BY EXOTHERMIC WELD CONNECTIONS.

ICE BRIDGE BONDING CONDUCTORS SHALL BE EXOTHERMICALLY BONDED OR BOLTED TO THE BRIDGE AND THE TOWER GROUND BAR.

APPROVED ANTIOXIDANT COATINGS (I.E. CONDUCTIVE GEL OR PASTE) SHALL BE USED ON ALL COMPRESSION AND BOLTED GROUND CONNECTIONS.

ALL EXTERIOR GROUND CONNECTIONS SHALL BE COATED WITH A CORROSION RESISTANT MATERIAL.

MISCELLANEOUS ELECTRICAL AND NON-ELECTRICAL METAL BOXES, FRAMES AND SUPPORTS SHALL BE BONDED TO THE GROUND RING, IN ACCORDANCE WITH THE NEC.

BOND ALL METALLIC OBJECTS WITHIN 6 FT. OF MAIN GROUND WIRES WITH
1-#2 AWG TIN-PLATED COPPER GROUND CONDUCTOR.

GROUND CONDUCTORS USED IN THE FACILITY GROUND AND LIGHTNING PROTECTION SYSTEMS SHALL NOT BE ROUTED THROUGH METALLIC OBJECTS THAT FORM A RING AROUND THE CONDUCTOR, SUCH AS METALLIC CONDUITS, METAL SUPPORT CLIPS OR SLEEVES THROUGH WALLS OR FLOORS, WHEN IT IS REQUIRED TO BE HOUSED IN CONDUIT TO MEET CODE REQUIREMENTS OR LOCAL CONDITIONS, NON-METALLIC MATERIAL SUCH AS PVC PLASTIC CONDUIT SHALL BE USED. WHERE USE OF METAL CONDUIT IS UNAVOIDABLE (E.G., NONMETALLIC CONDUIT PROHIBITED BY LOCAL CODE) THE GROUND CONDUCTOR SHALL BE BONDED TO EACH END OF THE METAL CONDUIT.

ELECTRICAL INSTALLATION NOTES:

ALL ELECTRICAL WORK SHALL BE PERFORMED IN ACCORDANCE WITH THE PROJECT SPECIFICATIONS, NEC AND ALL APPLICABLE LOCAL CODES.

CONDUIT ROUTINGS ARE SCHEMATIC. SUBCONTRACTOR SHALL INSTALL CONDUITS SO THAT ACCESS TO EQUIPMENT IS NOT BLOCKED.

WIRING, RACEWAY & SUPPORT METHODS AND MATERIALS SHALL COMPLY WITH THE REQUIREMENTS OF THE NEC.

ALL CIRCUITS SHALL BE SEGREGATED AND MAINTAIN MINIMUM CABLE SEPARATION AS REQUIRED BY THE NEC.

CABLES SHALL NOT BE ROUTED THROUGH LADDER-STYLE CABLE TRAY RUNGS.

EACH END OF EVERY POWER, POWER PHASE CONDUCTOR (I.E., HOTS), GROUNDING AND T1 CONDUCTOR AND CABLE SHALL BE LABELED WITH COLOR-CODED INSULATION OR ELECTRICAL TAPE (3M BRAND, 1/2" PLASTIC ELECTRICAL TAPE WITH UV PROTECTION, OR APPROVED EQUAL). THE IDENTIFICATION METHOD SHALL CONFORM WITH NEC AND OSHA.

ALL ELECTRICAL COMPONENTS SHALL BE CLEARLY LABELED WITH PLASTIC TAPE PER COLOR SCHEDULE. ALL EQUIPMENT SHALL BE LABELED WITH THEIR VOLTAGE RATING, PHASE CONFIGURATION, WIRE CONFIGURATION, POWER OR AMPACITY RATING AND BRANCH CIRCUIT ID NUMBERS (I.E. PANEL BOARD AND CIRCUIT ID'S).

PANEL BOARDS (ID NUMBERS) AND INTERNAL CIRCUIT BREAKERS (CIRCUIT ID NUMBERS) SHALL BE CLEARLY LABELED WITH PLASTIC LABELS.

ALL TIE WRAPS SHALL BE CUT FLUSH WITH APPROVED CUTTING TOOL TO REMOVE SHARP EDGES.

POWER, CONTROL AND EQUIPMENT GROUND WIRING IN TUBING OR CONDUIT SHALL BE SINGLE CONDUCTOR (#14 AWG OR LARGER), 600 V, OIL RESISTANT THHN OR THWN-2, CLASS B STRANDED COPPER CABLE RATED FOR 90° C (WET & DRY) OPERATION LISTED OR LABELED FOR THE LOCATION AND RACEWAY SYSTEM USED UNLESS OTHERWISE SPECIFIED.

SUPPLEMENTAL EQUIPMENT GROUND WIRING LOCATED INDOORS SHALL BE SINGLE CONDUCTOR (#6 AWG OR LARGER), 600V, OIL RESISTANT THHN OR THWN-2 GREEN INSULATION CLASS B STRANDED COPPER CABLE RATED FOR 90° C (WET AND DRY) OPERATION LISTED OR LABELED FOR THE LOCATION AND RACEWAY SYSTEM USED UNLESS OTHERWISE SPECIFIED.

POWER AND CONTROL WIRING, NOT IN TUBING OR CONDUIT, SHALL BE MULTI-CONDUCTOR, TYPE TC CABLE (#14 AWG OR LARGER), 600 V, OIL RESISTANT THHN OR THWN-2, CLASS B STRANDED COPPER CABLE RATED FOR 90° C (WET AND DRY) OPERATION WITH OUTER JACKET LISTED OR LABELED FOR THE LOCATION USED UNLESS OTHERWISE SPECIFIED.

ALL POWER AND GROUNDING CONNECTIONS SHALL BE CRIMP-STYLE, COMPRESSION WIRE LUGS AND WIRE NUTS BY THOMAS AND BETTS (OR APPROVED EQUAL). LUGS AND WIRE NUTS SHALL BE RATED FOR OPERATION AT NO LESS THAN 75° C (90° C IF AVAILABLE).

RACEWAY AND CABLE TRAY SHALL BE LISTED OR LABELED FOR ELECTRICAL USE IN ACCORDANCE WITH NEMA, UL, ANSI/IEEE AND NEC.

ELECTRICAL METALLIC TUBING (EMT) OR RIGID NONMETALLIC CONDUIT (I.E. RIGID PVC SCHEDULE 40 OR RIGID PVC SCHEDULE 80 FOR LOCATIONS SUBJECT TO PHYSICAL DAMAGE) SHALL BE USED FOR EXPOSED INDOOR LOCATIONS.

ELECTRICAL METALLIC TUBING (EMT), ELECTRICAL NONMETALLIC TUBING (ENT) OR RIGID NONMETALLIC CONDUIT (RIGID PVC, SCHEDULE 40) SHALL BE USED FOR CONCEALED INDOOR LOCATIONS.

GALVANIZED STEEL INTERMEDIATE METALLIC CONDUIT (IMC) SHALL BE USED FOR OUTDOOR LOCATIONS ABOVE GRADE.

RIGID NONMETALLIC CONDUIT (I.E. RIGID PVC SCHEDULE 40 OR RIGID PVC SCHEDULE 80) SHALL BE USED UNDERGROUND; DIRECT BURIED, IN AREAS OF OCCASIONAL LIGHT VEHICLE TRAFFIC OR ENCASED IN REINFORCED CONCRETE IN AREAS OF HEAVY VEHICLE TRAFFIC.

LIQUID-TIGHT FLEXIBLE METALLIC CONDUIT (LIQUID-TITE FLEX) SHALL BE USED INDOORS AND OUTDOORS, WHERE VIBRATION OCCURS OR FLEXIBILITY IS NEEDED.

CONDUIT AND TUBING FITTINGS SHALL BE THREADED OR COMPRESSION-TYPE AND APPROVED FOR THE LOCATION USED. SET SCREW FITTINGS ARE NOT ACCEPTABLE.

CABINETS, BOXES AND WIRE WAYS SHALL BE LABELED FOR ELECTRICAL USE IN ACCORDANCE WITH NEMA, UL, ANSI/IEEE AND NEC.

WIREWAYS SHALL BE EPOXY-COATED (GRAY) AND INCLUDE A HINGED COVER, DESIGNED TO SWING OPEN DOWNWARDS; SHALL BE PANDUIT TYPE E (OR APPROVED EQUAL); AND RATED NEMA 1 (OR BETTER).

EQUIPMENT CABINETS, TERMINAL BOXES, JUNCTION BOXES AND PULL BOXES SHALL BE GALVANIZED OR EPOXY-COATED SHEET STEEL. SHALL MEET OR EXCEED UL 50 AND RATED NEMA 1 (OR BETTER) INDOORS OR NEMA 3R (OR BETTER) OUTDOORS.

METAL RECEPTACLE, SWITCH AND DEVICE BOXES SHALL BE GALVANIZED, EPOXY-COATED OR NON-CORRODING; SHALL MEET OR EXCEED UL 514A AND NEMA OS 1; AND RATED NEMA 1 (OR BETTER) INDOORS OR WEATHER PROTECTED (WP OR BETTER) OUTDOORS.

NONMETALLIC RECEPTACLE, SWITCH AND DEVICE BOXES SHALL MEET OR EXCEED NEMA OS 2; AND RATED NEMA 1 (OR BETTER) INDOORS OR WEATHER PROTECTED (WP OR BETTER) OUTDOORS.

THE SUBCONTRACTOR SHALL NOTIFY AND OBTAIN NECESSARY AUTHORIZATION FROM THE CONTRACTOR BEFORE COMMENCING WORK ON THE AC POWER DISTRIBUTION PANELS.

THE SUBCONTRACTOR SHALL PROVIDE NECESSARY TAGGING ON THE BREAKERS, CABLES AND DISTRIBUTION PANELS IN ACCORDANCE WITH THE APPLICABLE CODES AND STANDARDS TO SAFEGUARD AGAINST LIFE AND PROPERTY.

INSTALL PLASTIC LABEL ON THE METER CENTER TO SHOW "AT&T WIRELESS".

PROJECT GENERAL NOTES:

1. OR THE PURPOSE OF CONSTRUCTION DRAWING, THE FOLLOWING DEFINITIONS SHALL APPLY:
CONTRACTOR- _____
SUBCONTRACTOR- GENERAL CONTRACTOR (CONSTRUCTION)
OWNER- AT&T
OEM- ORIGINAL EQUIPMENT MANUFACTURER
2. PRIOR TO THE SUBMISSION OF BIDS, THE BIDDING SUBCONTRACTOR SHALL VISIT THE CELL SITE TO FAMILIARIZE WITH THE EXISTING CONDITIONS AND TO CONFIRM THAT THE WORK CAN BE ACCOMPLISHED AS SHOWN ON THE CONSTRUCTION DRAWINGS. ANY DISCREPANCY FOUND SHALL BE BROUGHT TO THE ATTENTION OF CONTRACTOR.
3. ALL MATERIALS FURNISHED AND INSTALLED SHALL BE IN STRICT ACCORDANCE WITH ALL APPLICABLE CODES, REGULATIONS AND ORDINANCES. SUBCONTRACTOR SHALL ISSUE ALL APPROPRIATE NOTICES AND COMPLY WITH ALL LAWS, ORDINANCES, RULES, REGULATIONS AND LAWFUL ORDERS OF ANY PUBLIC AUTHORITY REGARDING THE PERFORMANCE OF THE WORK. ALL WORK CARRIED OUT SHALL COMPLY WITH ALL APPLICABLE MUNICIPAL AND UTILITY COMPANY SPECIFICATIONS AND LOCAL JURISDICTIONAL CODES, ORDINANCES AND APPLICABLE REGULATIONS.
4. DRAWINGS PROVIDED HERE ARE NOT TO SCALE AND ARE INTENDED TO SHOW OUTLINE ONLY.
5. UNLESS NOTED OTHERWISE, THE WORK SHALL INCLUDE FURNISHING MATERIALS, EQUIPMENT, APPURTENANCES AND LABOR NECESSARY TO COMPLETE ALL INSTALLATIONS AS INDICATED ON THE DRAWINGS.
6. "KITTING LIST" SUPPLIED WITH THE BID PACKAGE IDENTIFIES ITEMS THAT WILL BE SUPPLIED BY CONTRACTOR. ITEMS NOT INCLUDED IN THE BILL OF MATERIALS AND KITTING LIST SHALL BE SUPPLIED BY THE SUBCONTRACTOR.
7. THE SUBCONTRACTOR SHALL INSTALL ALL EQUIPMENT AND MATERIALS IN ACCORDANCE WITH MANUFACTURER'S RECOMMENDATIONS UNLESS SPECIFICALLY STATED OTHERWISE.
8. IF THE SPECIFIED EQUIPMENT CAN NOT BE INSTALLED AS SHOWN ON THESE DRAWINGS, THE SUBCONTRACTOR SHALL PROPOSE AN ALTERNATIVE INSTALLATION FOR APPROVAL BY THE CONTRACTOR.
9. SUBCONTRACTOR SHALL DETERMINE ACTUAL ROUTING OF CONDUIT, POWER AND T1 CABLES, GROUNDING CABLES AS SHOWN ON THE POWER, GROUNDING AND TELCO PLAN DRAWINGS.
10. THE SUBCONTRACTOR SHALL PROTECT EXISTING IMPROVEMENTS, PAVEMENTS, CURBS, LANDSCAPING AND STRUCTURES. ANY DAMAGED PART SHALL BE REPAIRED AT SUBCONTRACTOR'S EXPENSE TO THE SATISFACTION OF OWNER.
11. SUBCONTRACTOR SHALL LEGALLY AND PROPERLY DISPOSE OF ALL SCRAP MATERIALS SUCH AS COAXIAL CABLES AND OTHER ITEMS REMOVED FROM THE EXISTING FACILITY. ANTENNAS REMOVED SHALL BE RETURNED TO THE OWNER'S DESIGNATED LOCATION.
12. SUBCONTRACTOR SHALL LEAVE PREMISES IN CLEAN CONDITION.
13. CONSTRUCTION SHALL COMPLY WITH SPECIFICATION 24782-000-3APS-A00Z-00002, "GENERAL CONSTRUCTION SERVICES FOR CONSTRUCTION OF AT&T GSM SITES".

ABBREVIATIONS AND SYMBOLS:

ABBREVIATIONS:

AGL	ABOVE GRADE LEVEL
BTS	BASE TRANSCEIVER STATION
(E)	EXISTING
MIN.	MINIMUM
N.T.S.	NOT TO SCALE
REF	REFERENCE
RF	RADIO FREQUENCY
T.B.D.	TO BE DETERMINED
T.B.R.	TO BE RESOLVED
TYP	TYPICAL
REQ	REQUIRED
EGR	EQUIPMENT GROUND RING
AWG	AMERICAN WIRE GAUGE
MGB	MASTER GROUND BAR
EG	EQUIPMENT GROUND
BCW	BARE COPPER WIRE
SIAD	SMART INTEGRATED ACCESS DEVICE
GEN	GENERATOR
IGR	INTERIOR GROUND RING (HALO)
RBS	RADIO BASE STATION

SYMBOLS:

S/G	SOLID GROUND BUS BAR
S/N	SOLID NEUTRAL BUS BAR
	SUPPLEMENTAL GROUND CONDUCTOR
	2-POLE THERMAL-MAGNETIC CIRCUIT BREAKER
	SINGLE-POLE THERMAL-MAGNETIC CIRCUIT BREAKER
	CHEMICAL GROUND ROD
	TEST WELL
	DISCONNECT SWITCH
M	METER

AT&T

smartlink

Trylon
1825 W. WALNUT HILL LANE, SUITE 120
IRVING, TEXAS 75038
1-855-669-5421

SUBMITTALS

REV	DATE	DESCRIPTION	BY
1	05/27/20	CLIENT COMMENTS	DB

RELEASED BY	DATE
MATTHEW JAMERSON	05/27/21

COMMONWEALTH OF VIRGINIA
MATTHEW K. JAMERSON
Lic. No. 0402061949
PROFESSIONAL ENGINEER

UNAUTHORIZED ALTERATION OR ADDITIONS TO A PLAN BEARING THE SEAL OF A LICENSED ENGINEER OR LAND SURVEYOR IS A VIOLATION OF LOCAL LAW

PROFESSIONAL CERTIFICATION. I HEREBY CERTIFY THAT THESE DOCUMENTS WERE PREPARED OR APPROVED BY ME, AND THAT I AM A DULY LICENSED PROFESSIONAL ENGINEER UNDER THE LAWS OF THE STATE OF VIRGINIA, LICENSE NO. 0402061949 EXP. 03/12/2022

0 1 2 3
ORIGINAL SIZE IN INCHES

SITE INFORMATION

AT&T NEW CRAN BUILD

SITE ADDRESS

CRAN_RWSH_ALEXA_045G
432 SOUTH COLUMBUS STREET
ALEXANDRIA, VA 22314

SHEET TITLE

GENERAL NOTES

SHEET NUMBER

GN-1

SYMBOL LEGEND

℄	– Centerline
MH	– Manhole
E	– Electric Vault
	– Sign
	– Traffic Pole
e	– Underground Electric
	– Light Pole
R/W	– Right-of-Way

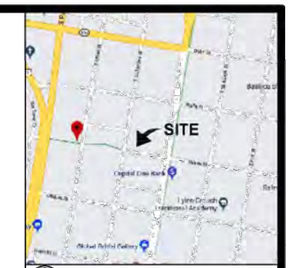

VICINITY MAP
NOT TO SCALE

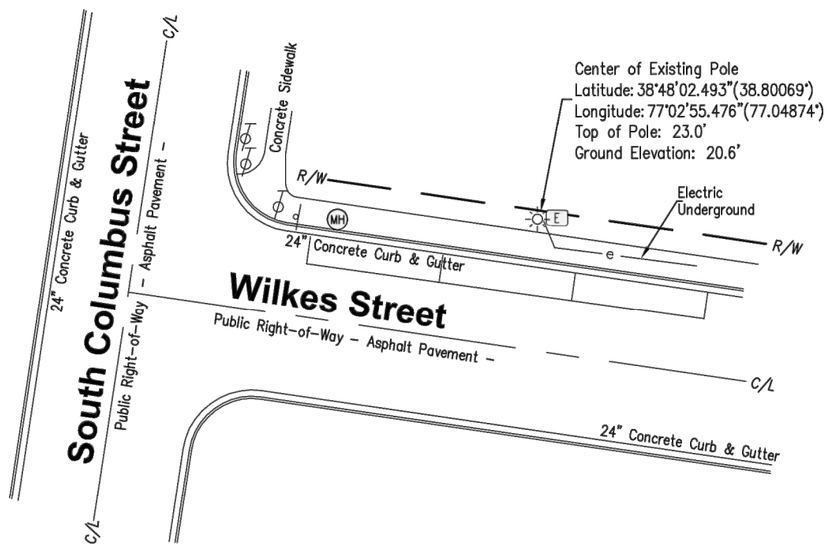

NORTH

0 30' 60'

1 INCH = 30 FT.
GRAPHIC SCALE

SURVEYOR'S NOTES:

1. This is a specific purpose survey for the stated purpose of locating improvements within a 50' radius of the proposed communications equipment which proposed location was provided by the client. This is not a boundary survey.
2. This survey was prepared without the benefit of a current title commitment.
3. A 811 utility locate request was made and markings found at the site, if any, have been noted. All underground utilities may not be shown and markings found at the site may not depict underground features accurately. Lacking excavation, the exact location of underground features cannot be accurately, completely, and reliably depicted. In some jurisdictions, 811 or other similar utility locate requests from surveyors may be ignored or result in an incomplete response.
4. The bearings and geodetic coordinates shown hereon are in the North American datum of 1983, based upon a GPS static session.

FLOOD ZONE:

By scaled map location and graphic plotting only, the subject property appears to lie entirely in Zone X–Unshaded (Areas determined to be outside the 0.2% annual chance floodplain.) according to the Flood Insurance Rate Map for the City of Alexandria, State of Virginia, Community Panel No. 5155190041E, Effective Date June 16, 2011.

CERTIFICATION:

Prepared under my responsible charge from a field survey conducted under my responsible charge and is in compliance with the requirements set forth by the Commonwealth of Virginia.

By: _____
Timothy L. Fish, PLS
Virginia Registered Land Surveyor
L.S. No. 403003144
VA Firm No. 0407004623

COMMONWEALTH OF VIRGINIA
Timothy L. Fish
Lic. No. 3144
LAND SURVEYOR

at&t | smartlink

SPECIAL PURPOSE SURVEY
Alexandria, Virginia
Site Name: CRAN_RWSH_ALEXA_045G

millman National Land Services

Millman Surveying, Inc.
Corporate Headquarters
4111 Bradley Circle NW, Suite 240
Canton, Ohio 44718
Phone: 800-520-1010
www.millmanland.com

Drawn By: JO	Project Manager: MR
Date: 2/03/20	Scale: 1"=30'
Checked: TF	Sheet: 1 of 1
MSI Project No. 46731	

Prepared for:
Trylon

AT&T
smartlink
Trylon
1825 W. WALNUT HILL LANE, SUITE 120
IRVING, TEXAS 75038
1-855-669-5421

SUBMITTALS

REV	DATE	DESCRIPTION	BY
1	05/27/20	CLIENT COMMENTS	DB

RELEASED BY	DATE
MATTHEW JAMERSON	05/27/21

COMMONWEALTH OF VIRGINIA
MATTHEW K. JAMERSON
Lic. No. 0402061949
PROFESSIONAL ENGINEER

UNAUTHORIZED ALTERATION OR ADDITIONS TO A PLAN BEARING THE SEAL OF A LICENSED ENGINEER OR LAND SURVEYOR IS A VIOLATION OF LOCAL LAW

PROFESSIONAL CERTIFICATION. I HEREBY CERTIFY THAT THESE DOCUMENTS WERE PREPARED OR APPROVED BY ME, AND THAT I AM A DULY LICENSED PROFESSIONAL ENGINEER UNDER THE LAWS OF THE STATE OF VIRGINIA, LICENSE NO. 0402061949 EXP. 03/12/2022

ORIGINAL SIZE IN INCHES

SITE INFORMATION
AT&T NEW CRAN BUILD

SITE ADDRESS
CRAN_RWSH_ALEXA_045G
432 SOUTH COLUMBUS STREET
ALEXANDRIA, VA 22314

SHEET TITLE
RIGHT OF WAY SURVEY

SHEET NUMBER
ROW

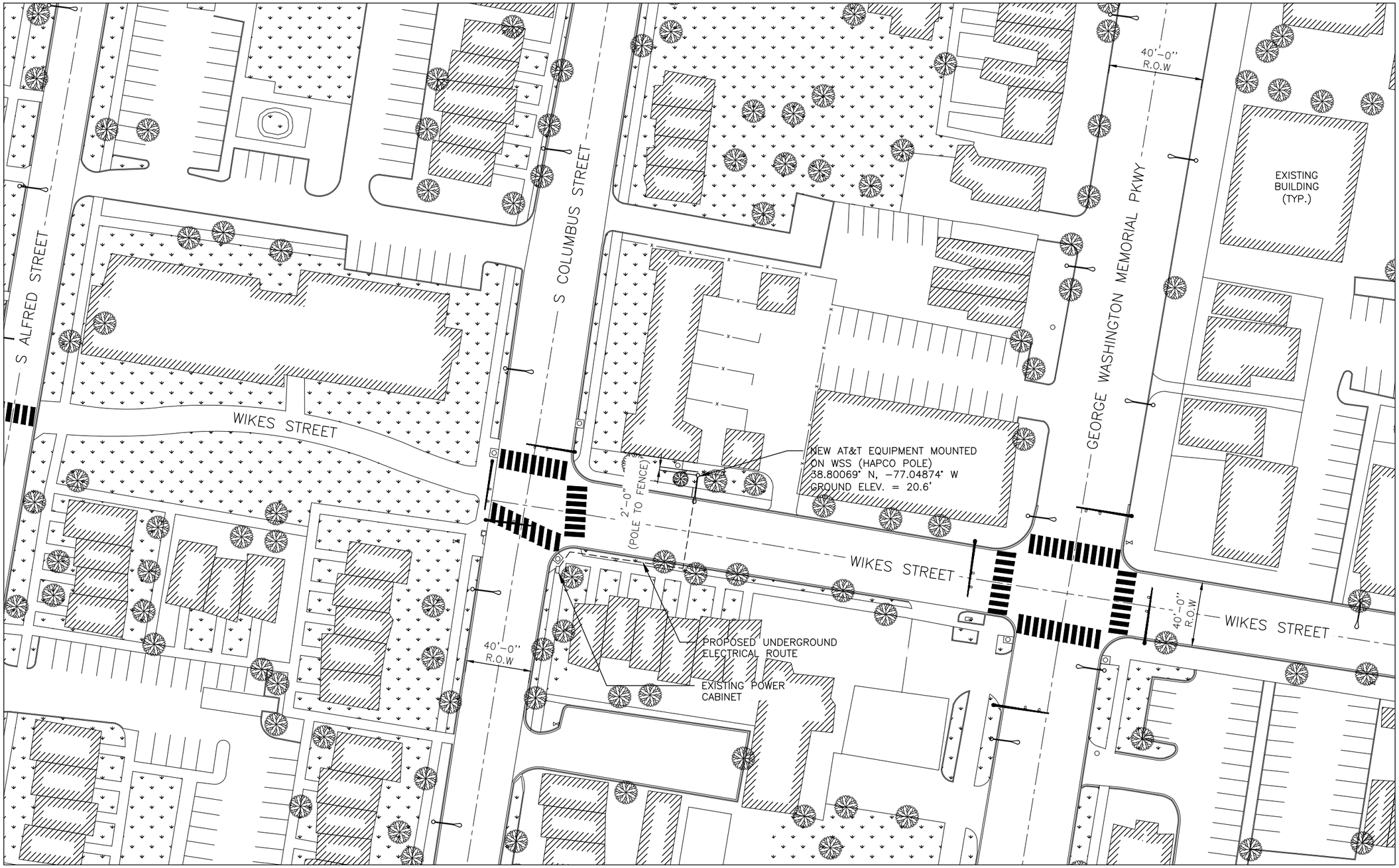

NOTE:

SITE PLAN INFORMATION IS BASED ON GIS DATA AND DOES NOT CONSTITUTE OR IS UNTENDED TO REPLACE A FORMAL SURVEY.

NORTH

1 / SP-1 **OVERALL SITE PLAN**

SCALE: 1" = 60'-0"

GRAPHIC SCALE:

60' 30' 0 30' 60'

SCALE (11x17): 1" = 60'-0"

SCALE (22x34): 1" = 30'-0"

AT&T

smartlink

Trylon

1825 W. WALNUT HILL LANE, SUITE 120
IRVING, TEXAS 75038
1-855-669-5421

SUBMITTALS

REV	DATE	DESCRIPTION	BY
1	05/27/20	CLIENT COMMENTS	DB

RELEASED BY	DATE
MATTHEW JAMERSON	05/27/21

COMMONWEALTH OF VIRGINIA
MATTHEW K. JAMERSON
Lic. No. 0402061949
PROFESSIONAL ENGINEER

UNAUTHORIZED ALTERATION OR ADDITIONS TO A PLAN BEARING THE SEAL OF A LICENSED ENGINEER OR LAND SURVEYOR IS A VIOLATION OF LOCAL LAW

PROFESSIONAL CERTIFICATION. I HEREBY CERTIFY THAT THESE DOCUMENTS WERE PREPARED OR APPROVED BY ME, AND THAT I AM A DULY LICENSED PROFESSIONAL ENGINEER UNDER THE LAWS OF THE STATE OF VIRGINIA, LICENSE NO. 0402061949 EXP. 03/12/2022

ORIGINAL SIZE IN INCHES

SITE INFORMATION

AT&T NEW CRAN BUILD

SITE ADDRESS

CRAN_RWSH_ALEXA_045G
432 SOUTH COLUMBUS STREET
ALEXANDRIA, VA 22314

SHEET TITLE

SITE PLAN

SHEET NUMBER

SP-1

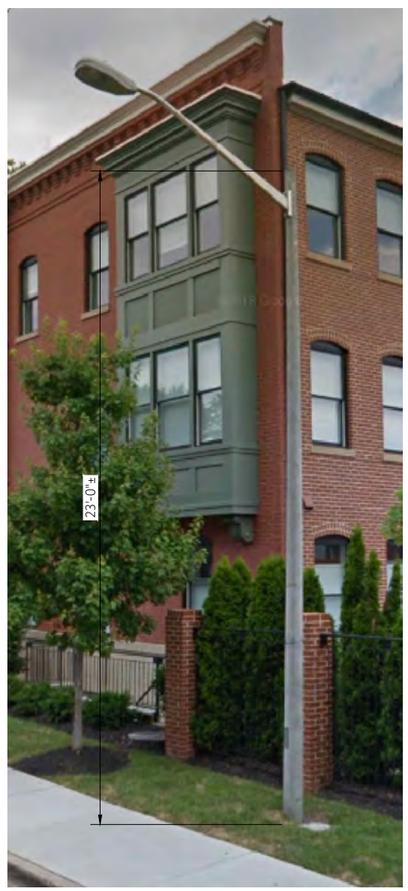

1 C-1 EXISTING CONDITIONS PHOTO
SCALE: 3/16" = 1'-0"

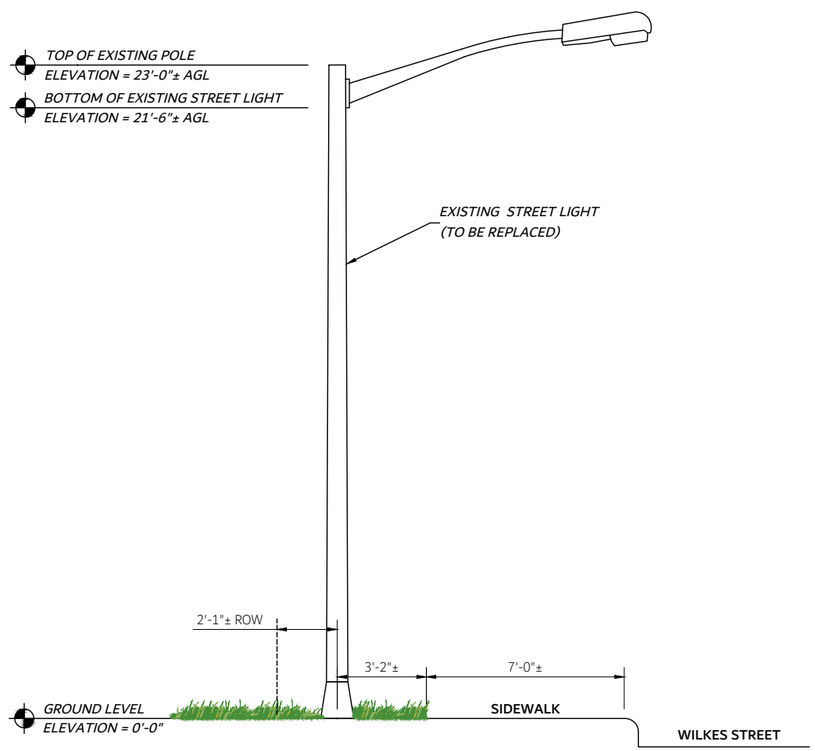

2 C-1 EXISTING ELEVATION VIEW
SCALE: 3/16" = 1'-0"

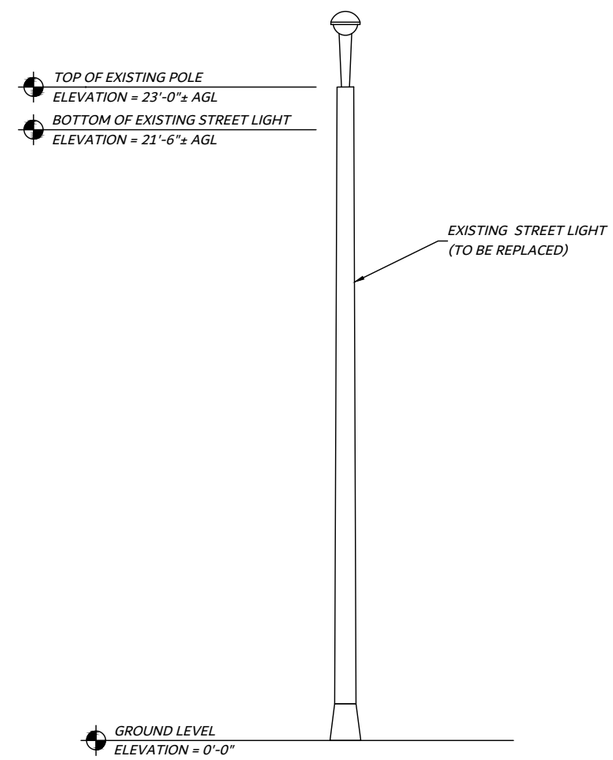

3 C-1 EXISTING PROFILE VIEW
SCALE: 3/16" = 1'-0"

AT&T

smartlink

Trylon

1825 W. WALNUT HILL LANE, SUITE 120
IRVING, TEXAS 75038
1-855-669-5421

SUBMITTALS

REV	DATE	DESCRIPTION	BY
1	05/27/20	CLIENT COMMENTS	DB

RELEASED BY	DATE
MATTHEW JAMERSON	05/27/21

COMMONWEALTH OF VIRGINIA
MATTHEW K. JAMERSON
Lic. No. 0402061949
PROFESSIONAL ENGINEER

UNAUTHORIZED ALTERATION OR ADDITIONS TO A PLAN BEARING THE SEAL OF A LICENSED ENGINEER OR LAND SURVEYOR IS A VIOLATION OF LOCAL LAW

PROFESSIONAL CERTIFICATION. I HEREBY CERTIFY THAT THESE DOCUMENTS WERE PREPARED OR APPROVED BY ME, AND THAT I AM A DULY LICENSED PROFESSIONAL ENGINEER UNDER THE LAWS OF THE STATE OF VIRGINIA, LICENSE NO. 0402061949 EXP. 03/12/2022

ORIGINAL SIZE IN INCHES

SITE INFORMATION

AT&T NEW CRAN BUILD

SITE ADDRESS

CRAN_RWSH_ALEXA_045G
432 SOUTH COLUMBUS STREET
ALEXANDRIA, VA 22314

SHEET TITLE

EXISTING ELEVATION VIEW

SHEET NUMBER

C-1

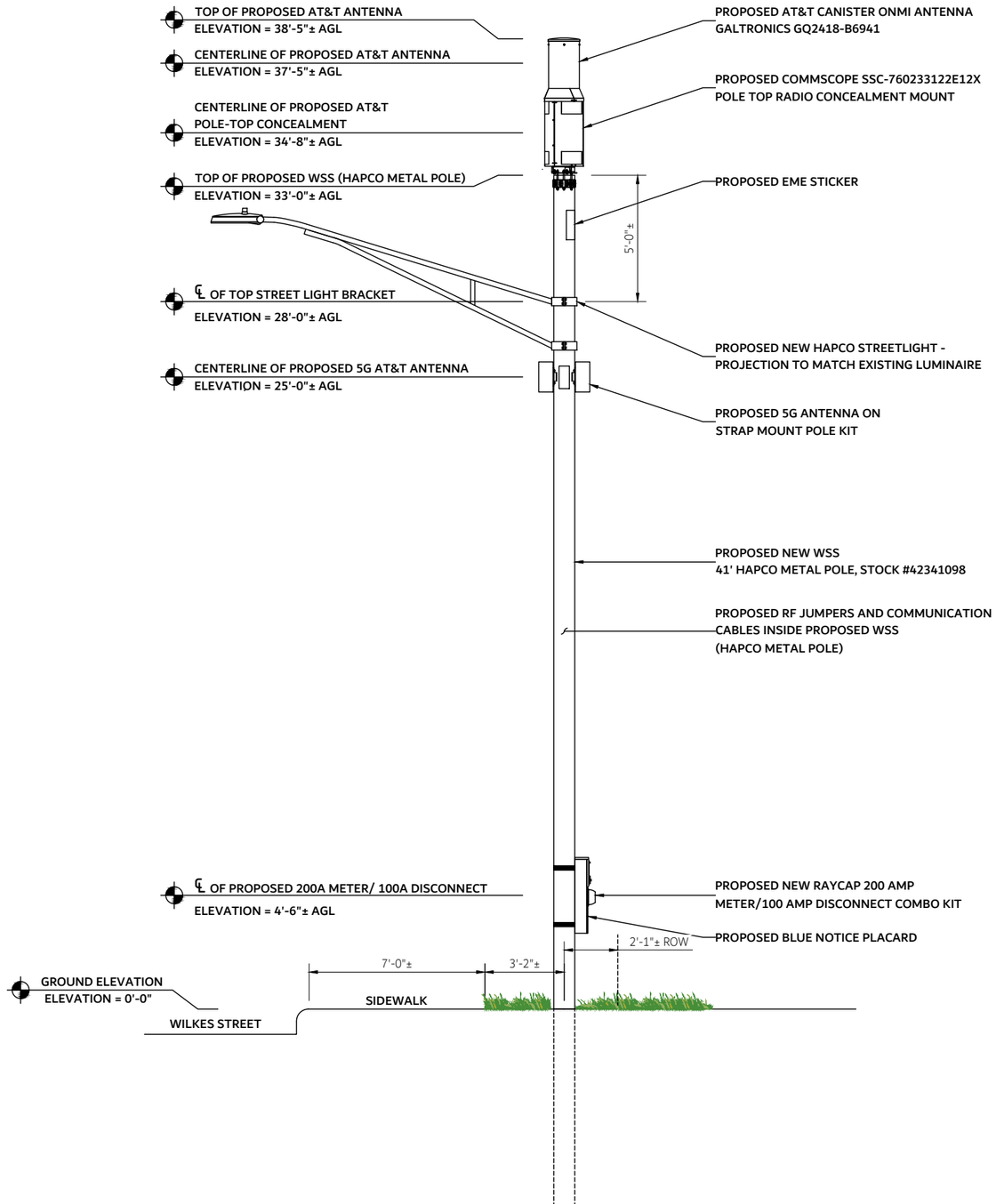

1 C-2 **PROPOSED ELEVATION VIEW**
SCALE: 3/16" = 1'-0"

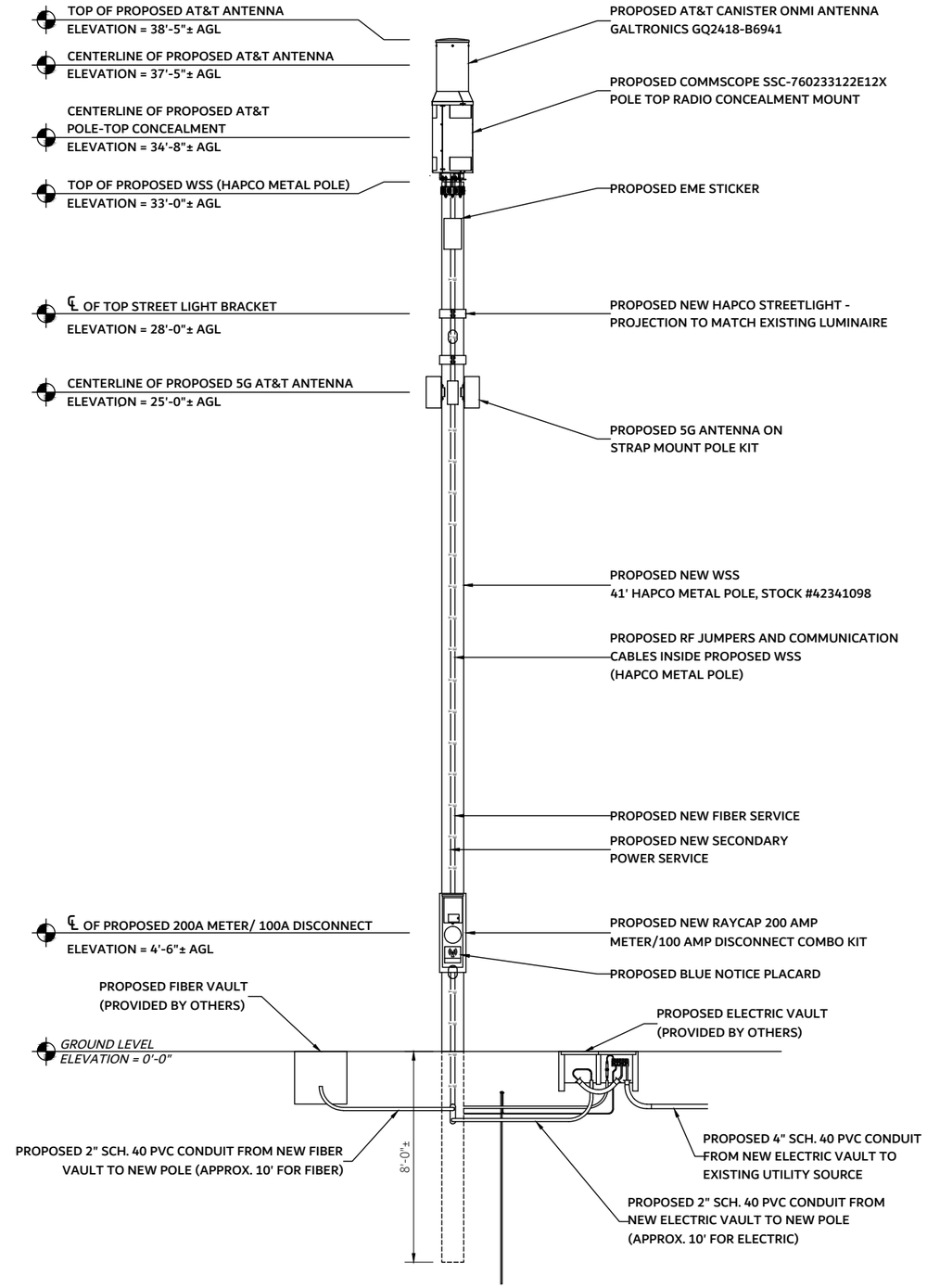

2 C-2 **PROPOSED PROFILE VIEW**
SCALE: 3/16" = 1'-0"

AT&T

smartlink

Trylon
1825 W. WALNUT HILL LANE, SUITE 120
IRVING, TEXAS 75038
1-855-669-5421

SUBMITTALS

REV	DATE	DESCRIPTION	BY
1	05/27/20	CLIENT COMMENTS	DB

RELEASED BY	DATE
MATTHEW JAMERSON	05/27/21

COMMONWEALTH OF VIRGINIA
MATTHEW K. JAMERSON
Lic. No. 0402061949
PROFESSIONAL ENGINEER

UNAUTHORIZED ALTERATION OR ADDITIONS TO A PLAN BEARING THE SEAL OF A LICENSED ENGINEER OR LAND SURVEYOR IS A VIOLATION OF LOCAL LAW

PROFESSIONAL CERTIFICATION. I HEREBY CERTIFY THAT THESE DOCUMENTS WERE PREPARED OR APPROVED BY ME, AND THAT I AM A DULY LICENSED PROFESSIONAL ENGINEER UNDER THE LAWS OF THE STATE OF VIRGINIA, LICENSE NO. 0402061949 EXP. 03/12/2022

0 1 2 3
ORIGINAL SIZE IN INCHES

SITE INFORMATION

AT&T NEW CRAN BUILD

SITE ADDRESS

CRAN_RWSH_ALEXA_045G
432 SOUTH COLUMBUS STREET
ALEXANDRIA, VA 22314

SHEET TITLE

PROPOSED ELEVATION VIEW

SHEET NUMBER

C-2

- AHFB B25 (PCS) – CEQ.20198
- AHIB B66 (AWS) – CEQ.20197

- HXWXD – 11.6" X 9.6" X 2.2"
- WEIGHT – 12.8 LBS.
- RF - NEX10 PLUS FEMALE
- POWER CONSUMPTION – 150 WATTS MAX
- MINIMUM AC FUSE RATING – 7 AMP
- 1 CPRI SFP INCLUDED

1 C-3 RRH DETAIL
NOT TO SCALE

- AZRB B46 (LAA) – CEQ.20927

- HXWXD – 11.6" X 10.6" X 2.2"
- WEIGHT – 12 LBS.
- RF - NEX10 PLUS FEMALE
- POWER CONSUMPTION – 90 WATTS MAX
- MINIMUM AC FUSE RATING – 7 AMP
- 2 CPRI SFP'S INCLUDED

2 C-3 RRH DETAIL
NOT TO SCALE

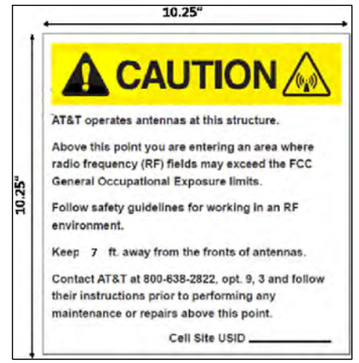

3 C-3 RF CAUTION SIGN DETAIL
NOT TO SCALE

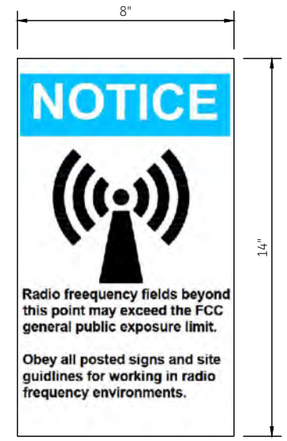

4 C-3 RF CAUTION SIGN DETAIL
NOT TO SCALE

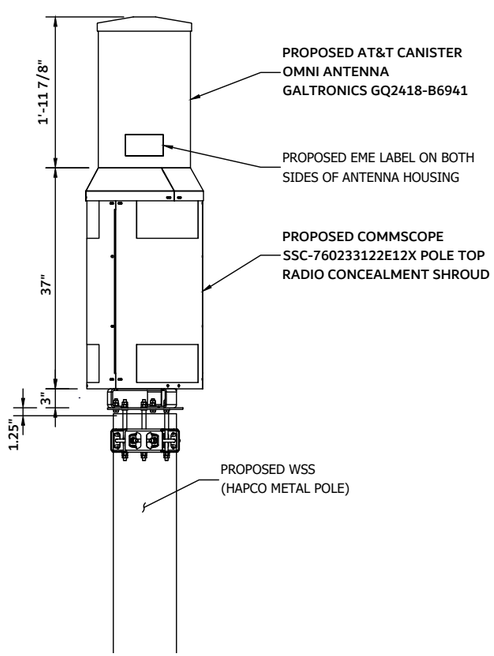

5 C-3 ANTENNA MOUNT DETAIL
NOT TO SCALE

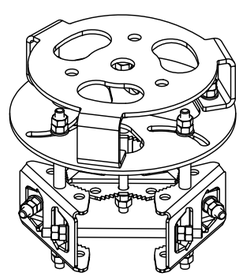

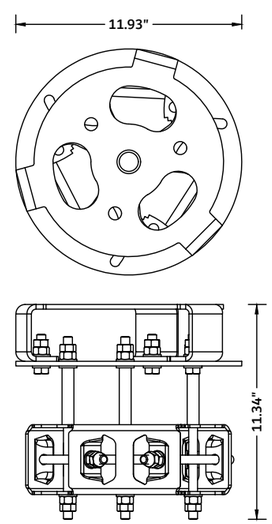

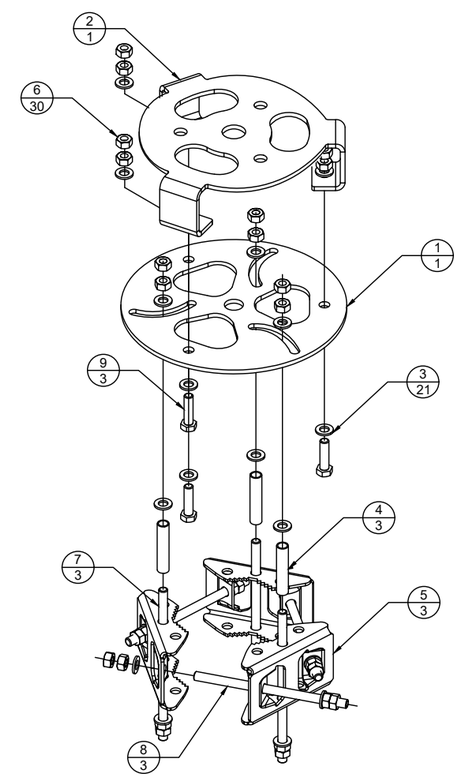

ITEM NO.	PART NUMBER	DESCRIPTION	QTY
1	860644741	MC TOP MOUNTING PLATE	1
2	860644742	ANTENNA MOUNT BRACKET, TRIPOD	1
3	100521-47	WSHR,FLAT,M12,13X28X2.5,STL,GALV	21
4	600679-4	SPACER TUBE	3
5	626852-1	PIPE CLAMP BRACKET,150X93.6X52MM	3
6	100526-45	NUTS,HEX,M12,STL,GALV	30
7	100555-81	STUD,THREADED,M12-1.75,245,STL,GALV	3
8	100555-82	STUD,THREADED,M12-1.75,215,STL,GALV	3
9	100534-265	SCR,HCS,HEX,M12X45,STL,GALV	3

NOTE:

CONTRACTOR TO USE COMMSCOPE POLE TOP MOUNTING KIT OR EQUIVALENT

6 C-3 COMMSCOPE POLE TOP MOUNTING KIT
NOT TO SCALE

AT&T

smartlink

Trylon
1825 W. WALNUT HILL LANE, SUITE 120
IRVING, TEXAS 75038
1-855-669-5421

SUBMITTALS

REV	DATE	DESCRIPTION	BY
1	05/27/20	CLIENT COMMENTS	DB

RELEASED BY	DATE
MATTHEW JAMERSON	05/27/21

COMMONWEALTH OF VIRGINIA
MATTHEW K. JAMERSON
Lic. No. 0402061949
PROFESSIONAL ENGINEER

UNAUTHORIZED ALTERATION OR ADDITIONS TO A PLAN BEARING THE SEAL OF A LICENSED ENGINEER OR LAND SURVEYOR IS A VIOLATION OF LOCAL LAW

PROFESSIONAL CERTIFICATION. I HEREBY CERTIFY THAT THESE DOCUMENTS WERE PREPARED OR APPROVED BY ME, AND THAT I AM A DULY LICENSED PROFESSIONAL ENGINEER UNDER THE LAWS OF THE STATE OF VIRGINIA, LICENSE NO. 0402061949 EXP. 03/12/2022

0 1 2 3
ORIGINAL SIZE IN INCHES

SITE INFORMATION

AT&T NEW CRAN BUILD

SITE ADDRESS

CRAN_RWSH_ALEXA_045G
432 SOUTH COLUMBUS STREET
ALEXANDRIA, VA 22314

SHEET TITLE

EQUIPMENT DETAILS

SHEET NUMBER

C-3

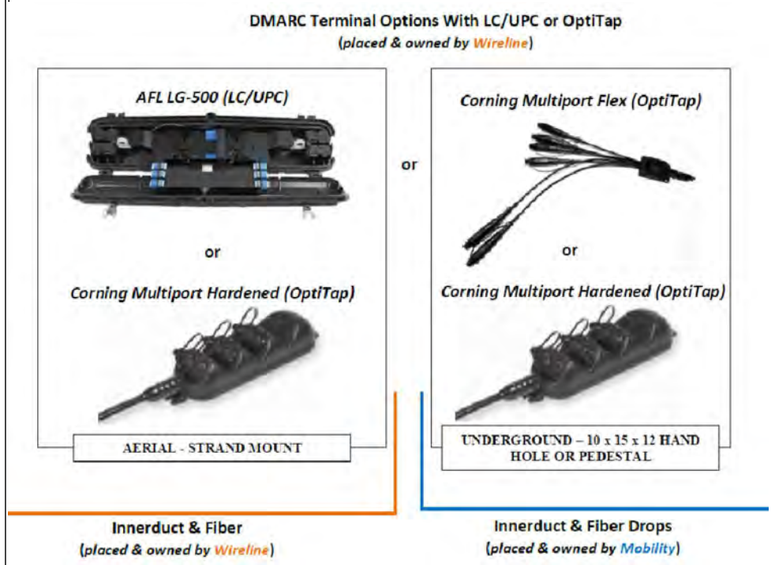

NOTE:
TRANSPORT CONNECTION TYPE TO BE VERIFIED BY GC PRIOR TO ORDERING FIBER EXTENSION CABLE.

1 / C-4 **TRANSPORT CONNECTION DETAIL**
NOT TO SCALE

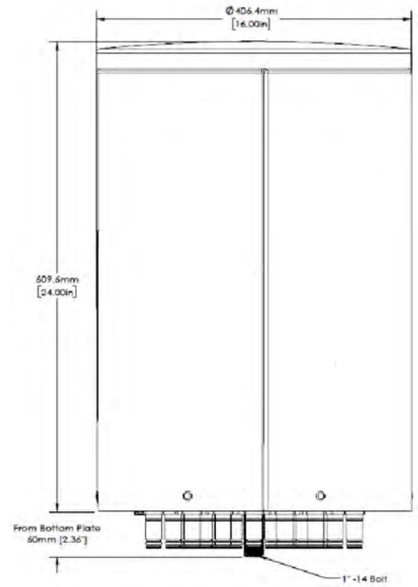

2 / C-4 **ANTENNA DETAIL**
NOT TO SCALE

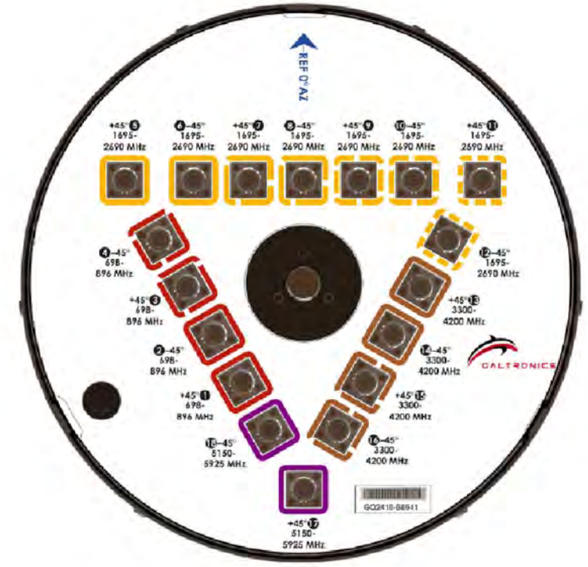

GALTRONICS ANTENNA:
MODEL: GQ2418-B6941
DIMENSIONS: 16"x24.0"
WEIGHT: 26.3 LBS

BOTTOM VIEW

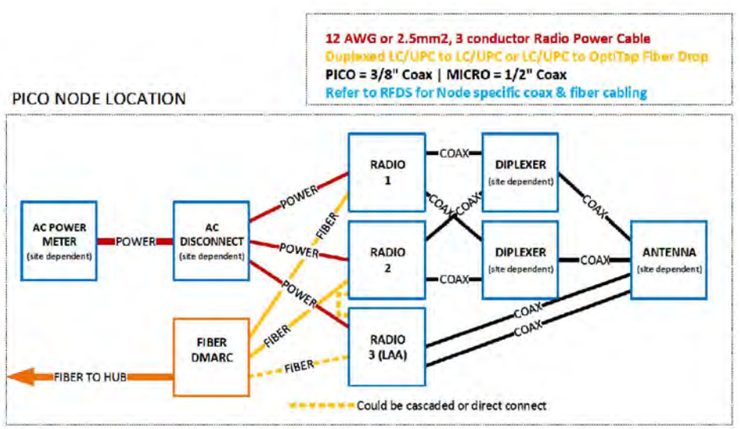

3 / C-4 **APPROVED CABLE MATRIX**
NOT TO SCALE

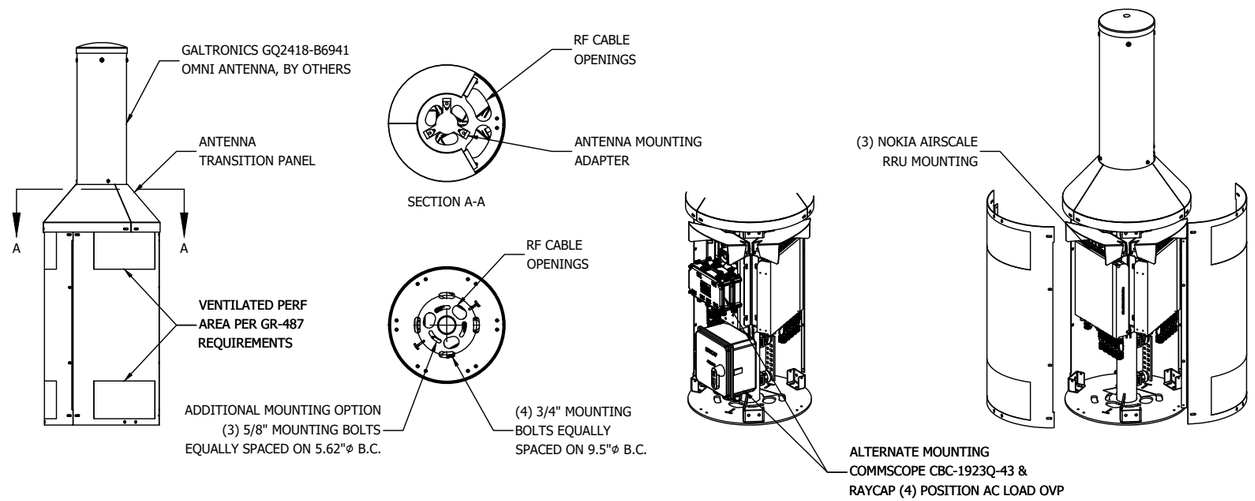

4 / C-4 **ANTENNA SHROUD DETAIL**
NOT TO SCALE

AT&T

smartlink

Trylon
1825 W. WALNUT HILL LANE, SUITE 120
IRVING, TEXAS 75038
1-855-669-5421

SUBMITTALS

REV	DATE	DESCRIPTION	BY
1	05/27/20	CLIENT COMMENTS	DB

RELEASED BY	DATE
MATTHEW JAMERSON	05/27/21

COMMONWEALTH OF VIRGINIA
MATTHEW K. JAMERSON
Lic. No. 0402061949
PROFESSIONAL ENGINEER

UNAUTHORIZED ALTERATION OR ADDITIONS TO A PLAN BEARING THE SEAL OF A LICENSED ENGINEER OR LAND SURVEYOR IS A VIOLATION OF LOCAL LAW

PROFESSIONAL CERTIFICATION. I HEREBY CERTIFY THAT THESE DOCUMENTS WERE PREPARED OR APPROVED BY ME, AND THAT I AM A DULY LICENSED PROFESSIONAL ENGINEER UNDER THE LAWS OF THE STATE OF VIRGINIA, LICENSE NO. 0402061949 EXP. 03/12/2022

ORIGINAL SIZE IN INCHES

SITE INFORMATION

AT&T NEW CRAN BUILD

SITE ADDRESS

CRAN_RWSH_ALEXA_045G
432 SOUTH COLUMBUS STREET
ALEXANDRIA, VA 22314

SHEET TITLE

EQUIPMENT DETAILS CONT.

SHEET NUMBER

C-4

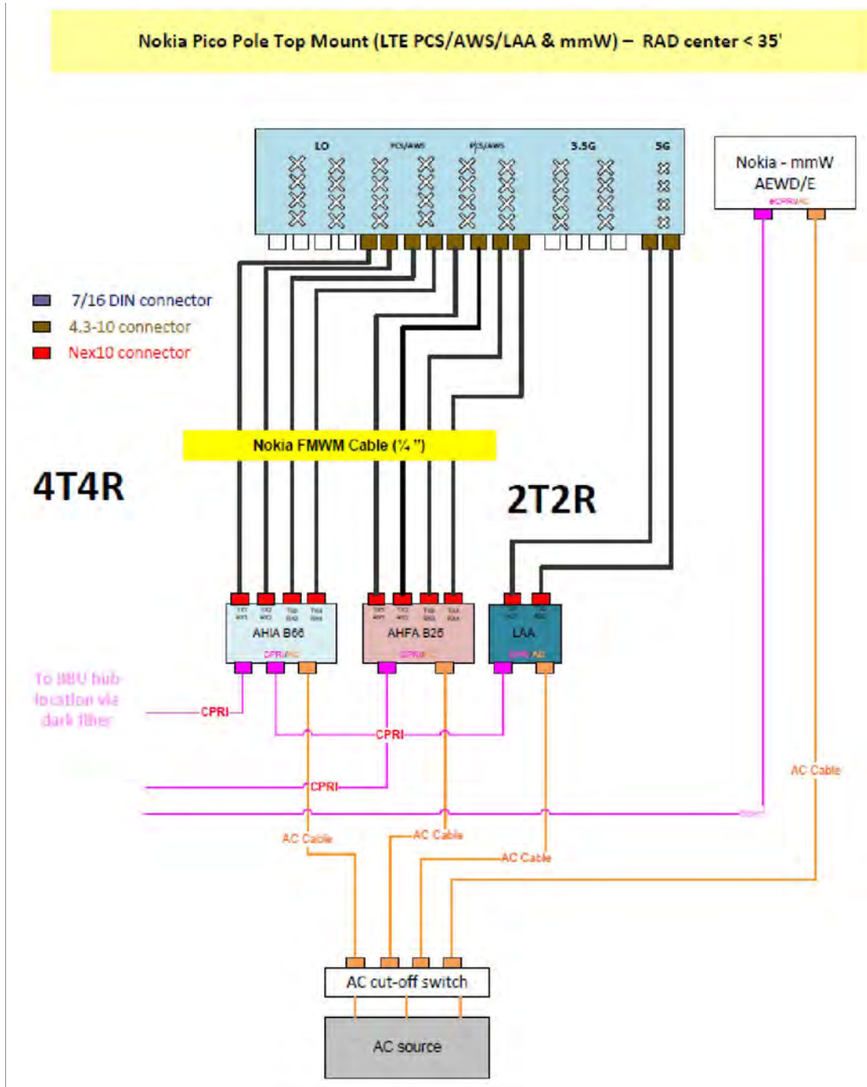

1 C-5 **PLUMBING DIAGRAM**
NOT TO SCALE

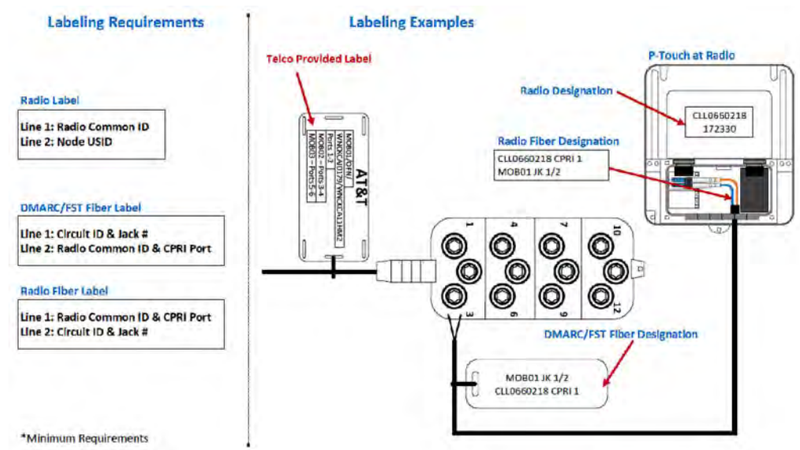

2 C-5 **FIBER P-TOUCH TAG DETAIL (TYPICAL)**
NOT TO SCALE

ANTENNA SCHEDULE									
SECTOR	STATUS	ANTENNA MANUFACTURER	ANTENNA MODEL	ANTENNA DIMENSIONS	RAD CENTER	TIP HEIGHT	AZIMUTH	RRH MODEL	CABLE LENGTH
ALPHA 1	PROPOSED	GALTRONICS	GQ2418-B6941	24.0"x16"Ø	37'-05"	38'-05"	0°-359°	AHFB B25 (PCS) - CEQ.20198 AHIB B66 (AWS) - CEQ.20197 AZRB B46 (LAA) - CEQ.20927	50'-00"
ALPHA 2	PROPOSED	NOKIA	5G-NR AEWD	12.75"H x 9.25"W x 6"D	25'-00"	25'-06"	0°-359°	INTEGRATED	50'-00"

3 C-5 **ANTENNA SCHEDULE**
NOT TO SCALE

AT&T

smartlink

Trylon
1825 W. WALNUT HILL LANE, SUITE 120
IRVING, TEXAS 75038
1-855-669-5421

SUBMITTALS

REV	DATE	DESCRIPTION	BY
1	05/27/20	CLIENT COMMENTS	DB

RELEASED BY	DATE
MATTHEW JAMERSON	05/27/21

COMMONWEALTH OF VIRGINIA
MATTHEW K. JAMERSON
Lic. No. 0402061949
PROFESSIONAL ENGINEER

UNAUTHORIZED ALTERATION OR ADDITIONS TO A PLAN BEARING THE SEAL OF A LICENSED ENGINEER OR LAND SURVEYOR IS A VIOLATION OF LOCAL LAW

PROFESSIONAL CERTIFICATION. I HEREBY CERTIFY THAT THESE DOCUMENTS WERE PREPARED OR APPROVED BY ME, AND THAT I AM A DULY LICENSED PROFESSIONAL ENGINEER UNDER THE LAWS OF THE STATE OF VIRGINIA, LICENSE NO. 0402061949 EXP. 03/12/2022

0 1 2 3
ORIGINAL SIZE IN INCHES

SITE INFORMATION

AT&T NEW CRAN BUILD

SITE ADDRESS

CRAN_RWSH_ALEXA_045G
432 SOUTH COLUMBUS STREET
ALEXANDRIA, VA 22314

SHEET TITLE

PLUMBING DIAGRAM

SHEET NUMBER

C-5

GENERAL NOTES:

1. THE POLE HAS THREE INTERNAL CHAMBERS.
   - CHAMBER "A" IS FOR WIRELESS PROVIDER'S CONDUCTORS (COMMUNICATION AND POWER).
   - CHAMBER "B" IS FOR STREETLIGHT CONDUCTORS.
   - CHAMBER "C" IS FOR STREETLIGHT CONDUCTORS TO SECOND STREETLIGHT IF NECESSARY.
2. THE STANDARD SETTING DEPTH IS 8 FT. DEEP.
   - USE SELECT BACKFILL (#57 STONE) INSTALLED IN 24" AUGER HOLE.
   - BACKFILL TO BE COMPACTED IN 6" LAYERS.
3. FOR SOFT SOILS, THE POLE MAY BE INSTALLED IN A PIPE PILE.
   - THE STANDARD PIPE PILE IS 30 INCHES IN DIAMETER AND 15 FT. LONG.
   - THE PIPE PILE IS TO BE VIBRATED INTO THE GROUND.
   - THE TOP OF THE PIPE PILE TO BE 6" BELOW GRADE TO ALLOW LANDSCAPING (GRASS).
   - STOCK NUMBER 42407588.
4. ALL POWER CONDUCTORS TO ORIGINATE FROM A DIVIDED SPLICE BOX ADJACENT TO THE POLE.
   - COMPANY OWNED CONDUCTORS TO TERMINATE IN SIDE MARKED "DOMINION".
     - DOMINION COVER HAS PENTA HEAD BOLTS.
   - WIRELESS PROVIDER'S POWER CONDUCTORS TO TERMINATE IN SIDE MARKED "PVT ELECTRIC".
     - PVT ELECTRIC COVER HAS STANDARD 9/16" HEX HEAD BOLTS.
   - DOMINION TO PUSH CONDUCTORS FORM PRIVATE SIDE INTO DOMINION SIDE AND MAKE CONNECTIONS.
   - SPLICE BOX TO BE A MINIMUM OF 3 FEET FROM AUGER HOLE.
5. THE METER BASE / DISCONNECT COMBO UNIT PROVIDES FOR 100 AMP SERVICE.
   - POLE INCLUEDS A BRACKET 5' ABOVE GROUNDLINE FOR MOUNTING THE RAYCAP METERBASE/ LOAD CENTER UNIT.
   - LINE SIDE CONDUCTORS ENTER REAR KNOCKOUT OF LOWER COMPARTMENT. (#6 AWG – 4/0).
   - LOAD SIDE CONDUCTORS ENTER REAR KNOCKOUTS OF UPPER COMPARTMENT.
6. MAXIMUM 20 FOOT ALUMINUM ELLIPTICAL BRACKET.
   - STREETLIGHT BRACKETS ARE CLAMPED TO THE POLE.
   - DOUBLE BRACKET MAY BE MOUNTED BACK TO BACK.
7. STREETLIGHT CONDUCTOR TO BE FUSED IN SPLICE BOX WITH 15 AMP FUSE.
   - USE SUBMERSIBLE STREETLIGHT FUSE KIT 66265000.
8. INSTALL FULL GRID ADDRESS 4 FEET ABOVE GRADE FACING THE STREET.
   - POLE SHALL BE IDENTIFIED BY APPLYING ADHESIVE STENCILING DIRECTLY TO POLE AFTER CLEANING THE AREA WITH A DEGREASER.
9. SERVICE TO METERBASE REQUIRES SEPARATE SECONDARY FROM TRANSFORMER TO THE SPLICE BOX.
   - ANTENNA SERVICE REQUIRES 120/240 VOLTS (OR 120/208 VOLTS).
10. TO ELIMINATE RF EXPOSURE, POWER TO THE ANTENNA MUST BE TURNED OFF PRIOR TO WORKING ON THE STREETLIGHT.
    - THE COMPANY MUST HAVE ACCESS TO THE DISCONNECT AT ALL TIMES. IF THE DISCONNECT MUST BE LOCKED, THE LOCK MUST BE AN EXPENDABLE TWIST OFF TYPE LOCK.
11. ALL GROUNDED CONDUCTORS TO BE BONDED TOGETHER.
12. MAXIMUM GROUNDLINE MOMENT OF 50 FOOT POLE IS 51,612 FT. LBS.
    - MAXIMUM SHEAR IS 1975 LBS.

REQUIREMENTS FOR ANTENNA ATTACHMENTS:

1. WIRELESS PROVIDER TO SUBMIT EQUIPMENT SPECIFICATIONS FOR MANUFACTURER'S APPROVAL.
2. RF HAZARD ANALYSIS TO BE SUBMITTED BY QUALIFIED ENGINEER.
3. RF NOTICE SIGN TO BE INSTALLED ABOVE STREETLIGHT BRACKET.
   - RF NOTICE SIGN TO BE FACING THE STREETLIGHT.
   - POLES WITH TWO STREETLIGHT BRACKETS MUST HAVE A RF NOTICE SIGN ON EACH SIDE OF THE POLE.
4. BATTERY BACK–UP FOR ANTENNA SERVICE IS NOT PERMITTED.
   - ANTENNA MUST BE ABLE TO BE DE–ENERGIZED BY REMOVING THE METER AND/OR OPENING THE DISCONNECT.
5. AN RF NOTICE SIGN MUST BE INSTALLED ON THE EQUIPMENT CABINET WHICH INCLUDES THE WIRELESS PROVIDER'S NAME AND 24 HOUR CONTACT PHONE NUMBER.
6. EQUIPMENT CASES CANNOT UNDULY OBSTRUCT A WALKWAY.
   - OTHERWISE 9 FEET OF GROUND CLEARANCE IS REQUIRED OVER PEDESTRIAN WALKWAYS.
7. UNLESS SPECIFIED OTHERWISE, ALL EQUIPMENT TO BE BANDED TO THE POLE.
8. THE WIRELESS PROVIDER TO DETERMINE THE NEED FOR PIPE PILES BASE ON SOIL CONDITIONS AND EQUIPMENT TO BE ATTACHED.
9. THE RAYCAP METERBASE/DISCONNECT COMBO UNIT TO BE OWNED BY THE WIRELESS PROVIDER.

1 / C-6 HAPCO POLE GENERAL NOTES

NOT TO SCALE

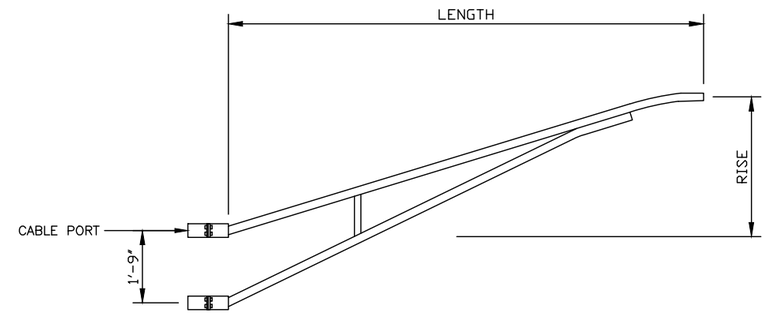

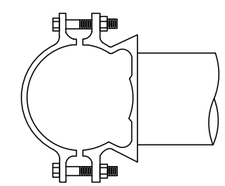

MOUNTING OF SINGLE BRACKET

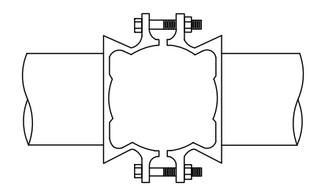

MOUNTING OF DOUBLE BRACKET

INSTRUCTIONS:

1. PLACE THE FRONT BAND/TRUSS ARM ONTO THE POLE, LINING UP THE CENTER OF THE UPPER ARM MEMBER WITH THE WIRE HOLE ON THE POLE.
2. WITH THE ARM IN PLACE, PLACE THE BACK BANDS ON THE OPPOSITE SIDE OF THE POLE AND LINE THEM UP WITH THE FRONT BANDS.
3. ONCE THE BOLT HOLES ON THE BANDS ARE LINED UP, INSERT THE BOLTS. USE THE INCLUDED WASHERS.
4. WITH THE BOLT RUNNING THROUGH BOTH BANDS, FASTEN THEM TOGETHER USING THE SUPPLIED HEX NUTS. USE THE INCLUDED WASHERS

COMPATIBLE UNIT	STOCK NO.	LENGTH	RISE	EPA	WEIGHT
BKTTB8FT	42341101	7'–6"	3'–3"	2.48 SQ.FT.	20.4 LBS.
BKTTB10FT	42341102	9'–6"	3'–3"	2.74 SQ.FT.	25.5 LBS.
BKTTB12FT	42341103	11'–6"	3'–3"	2.98 SQ.FT.	31.9 LBS.
BKTTB16FT	42341104	14'–6"	3'–3"	3.47 SQ.FT.	43.4 LBS.
BKTTB20FT	42341052	20'	2'–8"	4.34 SQ.FT.	62.3 LBS.

2 / C-6 HAPCO POLE STREET LIGHT BRACKET DETAIL

NOT TO SCALE

AT&T

smartlink

Trylon

1825 W. WALNUT HILL LANE, SUITE 120
IRVING, TEXAS 75038
1-855-669-5421

SUBMITTALS

REV	DATE	DESCRIPTION	BY
1	05/27/20	CLIENT COMMENTS	DB

RELEASED BY	DATE
MATTHEW JAMERSON	05/27/21

COMMONWEALTH OF VIRGINIA
MATTHEW K. JAMERSON
Lic. No. 0402061949
PROFESSIONAL ENGINEER

UNAUTHORIZED ALTERATION OR ADDITIONS TO A PLAN BEARING THE SEAL OF A LICENSED ENGINEER OR LAND SURVEYOR IS A VIOLATION OF LOCAL LAW

PROFESSIONAL CERTIFICATION. I HEREBY CERTIFY THAT THESE DOCUMENTS WERE PREPARED OR APPROVED BY ME, AND THAT I AM A DULY LICENSED PROFESSIONAL ENGINEER UNDER THE LAWS OF THE STATE OF VIRGINIA, LICENSE NO. 0402061949 EXP. 03/12/2022

ORIGINAL SIZE IN INCHES

SITE INFORMATION

AT&T NEW CRAN BUILD

SITE ADDRESS

CRAN_RWSH_ALEXA_045G
432 SOUTH COLUMBUS STREET
ALEXANDRIA, VA 22314

SHEET TITLE

HAPCO METAL POLE DETAILS

SHEET NUMBER

C-6

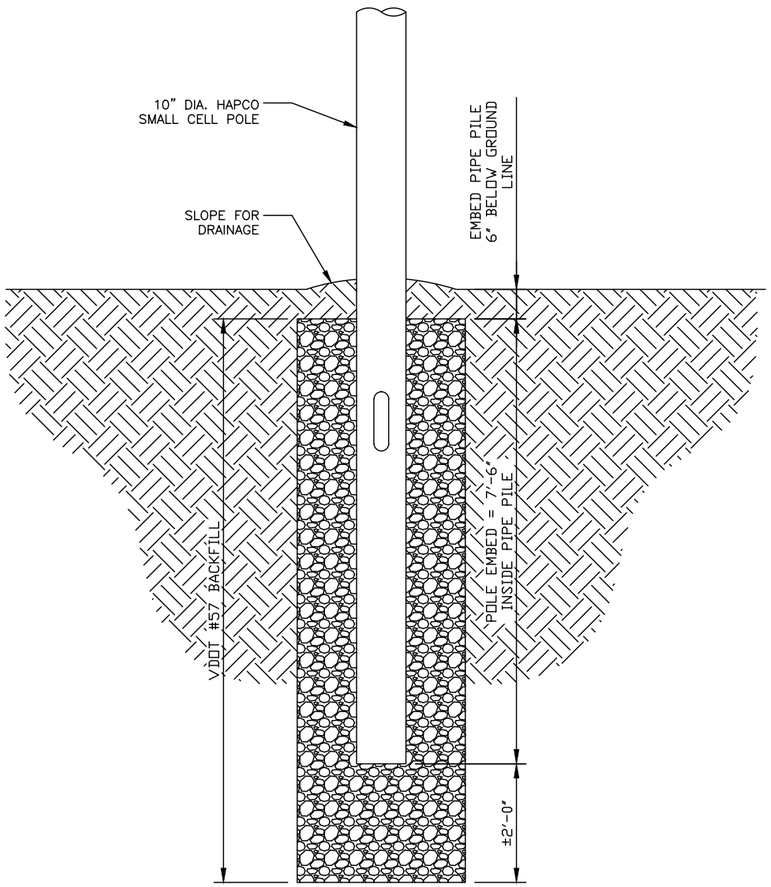

GENERAL NOTES;

1. CLEAN OUT PIPE PILE TO REQ'D DEPTH: 7'–6" + 2'–0" MIN.
2. ADD SPECIFIED COMPACTED STONE BACKFILL – MINIMUM OF 2'–0" BELOW THE BASE PLATE OF THE POLE.
3. BACKFILL MATERIAL SHALL BE PLACED IN 4" LIFTS. EACH LAYER SHALL BE COMPACTED USING MECHANICAL OR PNEUMATIC TAMPERS. A MINIMUM OF 3 PASSES SHALL BE MADE OVER EACH LAYER. ADDITIONAL PASSES ARE TO BE MADE IF DISPLACEMENT OF THE BACK FILL IS STILL EVIDENT ON THE OPERATOR TO MAINTAIN DOWNWARD PRESSURE ON THE UNI8T AT ALL TIMES.

1 / C-7 HAPCO POLE INSTALLATION DETAIL

NOT TO SCALE

NOTES:

1. STEEL PIPE PILE SHALL CONFORM TO THE LATEST EDITION OF ASTM SPECIFICATION A–252 "WELDED AND SEAMLESS STEEL PIPE PILES". STEEL PLATE FOR PILE FABRICATION TO HAVE A MINIMUM Fy=45 KSI. CORROSION RESISTANT STEEL TYPES SUCH AS ASTM A242, A588, A871 ETC. ARE NOT TO BE USED.
2. PILES MAY BE FABRICATED AS ROUND, 12–SIDED OR 16–SIDED SHAPES. DIAMETER REFERENCE FOR 12–SIDED AND 16–SIDED SHAPES IS TO BE MEASURED FROM FLAT TO FLAT.
3. ALL WELDING TO BE IN ACCORDANCE WITH THE LATEST EDITION OF AWS D1.1. USE APPROPRIATE ELECTRODE FOR STEEL GRADE TYPES, (E70 MINIMUM). CIRCUMFERENTIAL AND LONGITUDINAL WELDS TO BE COMPLETE–PENETRATION.
4. PIPE PILE VENDOR SHALL SUPPLY THE 1" DIA. HEAVY HEX GALVANIZED NUTS AND THREE 1" DIA. GALVANIZED LEVELING BOLTS AND ENSURE THESE NUTS AND BOLTS ARE COMPATIBLE WITH EACH OTHER. LEVELING BOLTS MAY BE FABRICATED OR AN ALL–THREAD BOLT WITH THE BOLT THREADS EXTENDING TO WITHIN 1/2" OF THE BOLT HEAD MAY BE USED. THIS HARDWARE SHALL BE HOT DIP GALVANIZED.
5. AFTER FABRICATION, HOT DIP GALVANIZE THE PILE AS SPECIFIED PER ASTM A123. PROVIDE ADDITIONAL HOLES IF NEEDED FOR HANDLING DURING GALVANIZING.
6. THE THREE 1" DIA. HEAVY HEX NUTS ON THE PILE MUST BE RE–TAPPED AFTER GALVANIZING THE PIPE PILE UNIT. PIPE PILE VENDOR IS RESPONSIBLE TO ENSURE THE LEVELING BOLTS CAN BE THREADED THROUGH EACH RE–TAPPED NUT AND WORKS PROPERLY PRIOR TO SHIPPING THE PILE TO DOMINION.
7. THE 1" DIA. LEVELING BOLTS ARE TO BE SHIPPED LOOSE TO PREVENT DAMAGE DURING SHIPMENT.

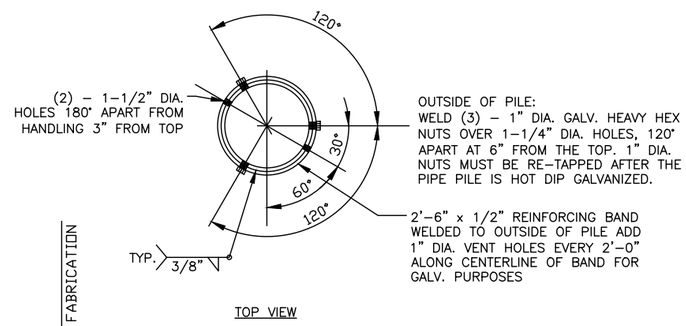

TOP VIEW

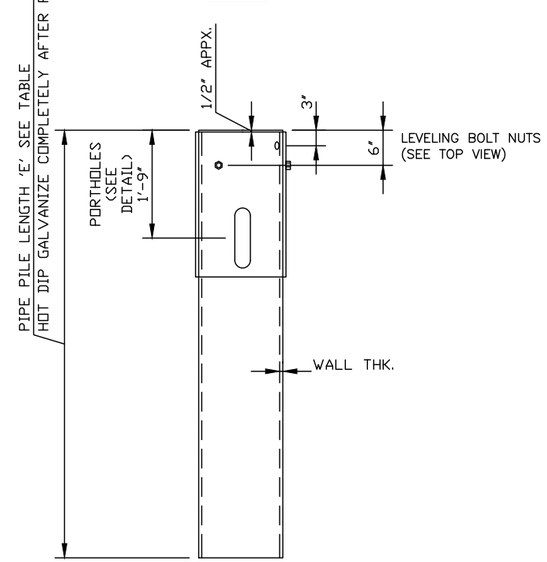

ITEM NO.	QUANTITY	PIPE PILE DIA.	TOTAL LENGTH 'E'	WALL THK.	APPX. WT. (LBS) (EACH)
750.00		30" O.D.	16'–0"	3/8"	1,856

STEEL PLATE FOR PILE: Fy = 45 KSI MIN.
APPX. PILE WEIGHTS INCLUDE SUPPORT VANGS AND REINFORCING BANDS.

PIPE PILE

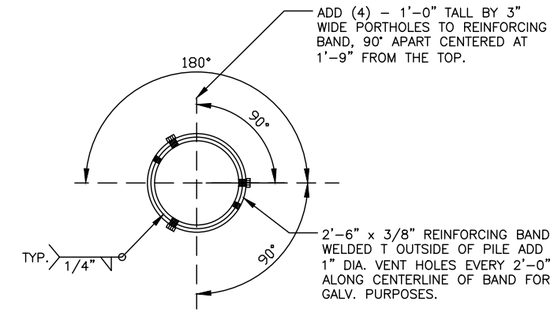

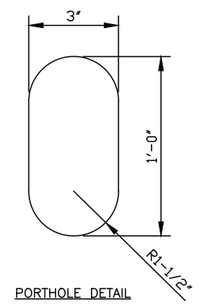

PORTHOLE DETAIL

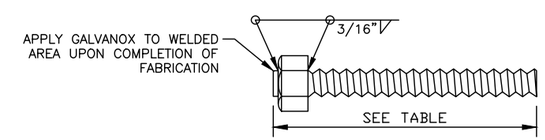

1" DIA. A307 GALV. TH'D ROD W/HH NUT WELDED ON OR ALL–THREAD BOLT (SEE NOTE 6) THREE (3) BOLTS REQUIRED PER PIPE PILE

ITEM NO.	QUANTITY	LEVELING BOLT LENGTH
781.00		18"

VERIFY THAT LEVELING BOLTS WORK PROPERLY IN 1" DIA. HEAVY HEX NUTS PRIOR TO SHIPPING.

LEVELING BOLT DETAIL

2 / C-7 PIPE PILE AND PORTHOLE DETAIL

NOT TO SCALE

AT&T

smartlink

Trylon

1825 W. WALNUT HILL LANE, SUITE 120
IRVING, TEXAS 75038
1-855-669-5421

SUBMITTALS

REV	DATE	DESCRIPTION	BY
1	05/27/20	CLIENT COMMENTS	DB

RELEASED BY	DATE
MATTHEW JAMERSON	05/27/21

COMMONWEALTH OF VIRGINIA
MATTHEW K. JAMERSON
Lic. No. 0402061949
PROFESSIONAL ENGINEER

UNAUTHORIZED ALTERATION OR ADDITIONS TO A PLAN BEARING THE SEAL OF A LICENSED ENGINEER OR LAND SURVEYOR IS A VIOLATION OF LOCAL LAW

PROFESSIONAL CERTIFICATION. I HEREBY CERTIFY THAT THESE DOCUMENTS WERE PREPARED OR APPROVED BY ME, AND THAT I AM A DULY LICENSED PROFESSIONAL ENGINEER UNDER THE LAWS OF THE STATE OF VIRGINIA, LICENSE NO. 0402061949 EXP. 03/12/2022

ORIGINAL SIZE IN INCHES

SITE INFORMATION

AT&T NEW CRAN BUILD

SITE ADDRESS

CRAN_RWSH_ALEXA_045G
432 SOUTH COLUMBUS STREET
ALEXANDRIA, VA 22314

SHEET TITLE

HAPCO METAL POLE DETAILS

SHEET NUMBER

C-7

5G Radio Main Module (39 GHz AEWD)

Ultra-Deployable Medium Power solution deployments

Specification[1]	Details
5G Band/Frequency	n260, 37000–40000 MHz
RF Output Power	EIRP 51 dBm
Max Supported Modulation	256 QAM DL / 64 QAM UL
RF Bandwidth	OBW: 800MHz; IBW: 1400MHz[2]
Carriers	Up to eight 100MHz 5G NR carriers
Carrier Bandwidth	50, 100, 200 , 400MHz
Physical Size[1]	Dimensions: 363(h) x 283(w) x 173(D) mm Volume: 12L, Weight: 12Kg (with integrated antenna)
Synchronization	via Airscale BBU
Backhaul Port	2 x SFP28 (eCPRI)
Antenna	Configuration: Integrated 2Tx/2Rx 2x128 AE w/ 2 single polarized 8 x 8 arrays per panel Horizontal Steering Angle :+/- 90° Vertical Steering Angle: +/-30° Horizontal BW: 12° ,Vertical BW: 9°
Operating Temp	-40°C to +55°C
Input Power	100 – 250 VAC, -40.5 – -57 VDC
Power Consumption	370W Typ
Other Interfaces	2 status LEDs and interconnect to Supplementary unit
Cooling	Forced Air
Ingress Protection Class	IP65
Surge Protection	Class II 5kA
Installation Options	Wall , Pole, and Strand

1 © 2018 Nokia [1] Specifications are preliminary and subject to change

Medium Power mmWave Radio Module Benefits

- Compact form factor enabling mass deployments of 5G-NR (mmWave)
- Main module incl. Antenna for 180° coverage + Extension Antenna module for 360° coverage
- Wide 1400MHz Instantaneous Bandwidth
- Modular platform that combines with RAP DU Module (ASOD) on site

Extension Module - AEWE

Main Module - AEWD

NOKIA

1 C-8 NOT TO SCALE

NOKIA - 5G ANTENNA DETAIL

Mounting Kits

474923A :AMEB AirScale Strap Mount Pole Kit
Any size pole up up to 6 inch pole with band straps included. Larger poles require customer to purchase larger band straps to accommodate pole.

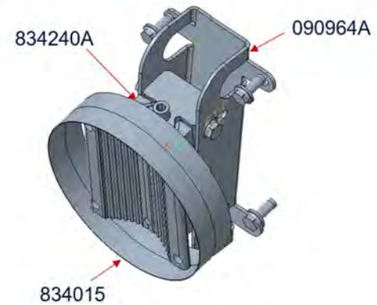

474941A: AMPD AirScale Tilt Mounting Kit
110 mm max pole size

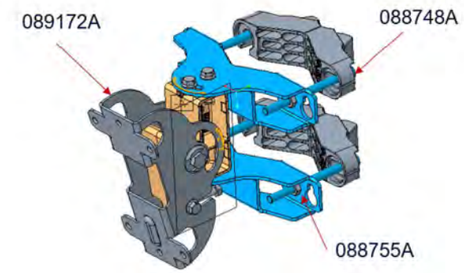

3 C-8 NOT TO SCALE

ANTENNA MOUNTING DETAILS

Ultra-Deployable 360° Site Solution AEWD & AEWE

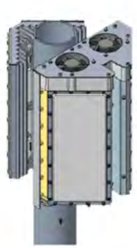

Side view
4-inch pole
(Use pole extension for Pole Top Mount)

Top view
4-inch pole

Top View
Flat Panel Mounted
180° - AWED only

- Quasi - omni
- 4 active beamforming antenna array panels providing 360° coverage
- Single cell efficiently sharing resources in coverage areas where required
- Perceived as 4 "virtual" cells
- UE perspective, single cell with 64 beams
- EMS sees this as one cell

2 C-8 NOT TO SCALE

5G ANTENNA MOUNTING DETAILS

AT&T

smartlink

Trylon

1825 W. WALNUT HILL LANE, SUITE 120
IRVING, TEXAS 75038
1-855-669-5421

SUBMITTALS

REV	DATE	DESCRIPTION	BY
1	05/27/20	CLIENT COMMENTS	DB

RELEASED BY	DATE
MATTHEW JAMERSON	05/27/21

COMMONWEALTH OF VIRGINIA
MATTHEW K. JAMERSON
Lic. No. 0402061949
PROFESSIONAL ENGINEER

UNAUTHORIZED ALTERATION OR ADDITIONS TO A PLAN BEARING THE SEAL OF A LICENSED ENGINEER OR LAND SURVEYOR IS A VIOLATION OF LOCAL LAW

PROFESSIONAL CERTIFICATION. I HEREBY CERTIFY THAT THESE DOCUMENTS WERE PREPARED OR APPROVED BY ME, AND THAT I AM A DULY LICENSED PROFESSIONAL ENGINEER UNDER THE LAWS OF THE STATE OF VIRGINIA, LICENSE NO. 0402061949 EXP. 03/12/2022

ORIGINAL SIZE IN INCHES

SITE INFORMATION

AT&T NEW CRAN BUILD

SITE ADDRESS

CRAN_RWSH_ALEXA_045G
432 SOUTH COLUMBUS STREET
ALEXANDRIA, VA 22314

SHEET TITLE

5G EQUIPMENT DETAILS

SHEET NUMBER

C-8

NOTES:
1. LINE SIDE CONDUCTORS TO ENTER BOTTOM KNOCKOUT IN REAR (#6 AWG – 4/0).
2. LOAD SIDE CONDUCTORS TO ENTER TOP KNOCKOUT IN REAR.
3. 120/208 VOLT SERVICE REQUIRES 5TH LUG.
4. BREAKER INTERRUPTING RATING IS 10,000 AMPS SYMMETRICAL.
5. UNIT ATTACHED TO MOUNTING PLATE WITH EIGHT 5/16" 18NC STAINLESS STEEL SCREWS.
   – SCREWS ARE PROVIDED WITH THE POLE.

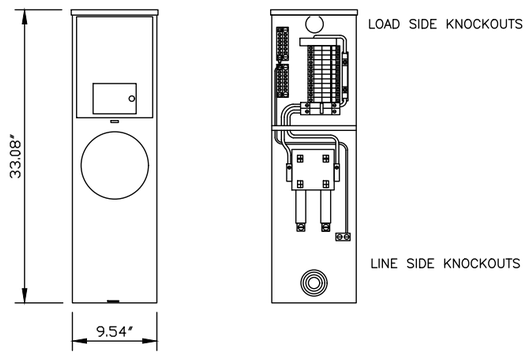

100 AMP METER/DISCONNECT COMBO
UNIT BY RAYCAP
CATALOG NO. RMX–E2C–Z12MS–21NND

1 E-1 RAYCAP METER/DISCONNECT PANEL DETAILS
NOT TO SCALE

NOTES:
1. COMPANY CONDUCTORS IN SIDE MARKED "DOMINION".
2. CUSTOMER CONDUCTORS IN SIDE MARKED "PVT ELECTRIC".
3. SPICE BOX NOT CLOSER THAN 3' FROM POLE AUGER HOLE.
4. STREETLIGHT CONDUCTORS AND CONDUIT TO ENTER POLE CHAMBER "C".
   – EXTEND 1" LFNC CONDUIT AT LEAST 12" INTO POLE CHAMBER.
5. CUSTOMER CONDUCTORS AND CONDUIT TO ENTER POLE CHAMBER "A".
6. CUSTOMER TO LEAVE AT LEAST 8' OF CONDUCTOR FOR TERMINATING IN SPLICE BOX.
7. CU SBOX36D IS MATERIAL ONLY.
8. IF NEEDED, SERVE SECOND STREETLIGHT WITH SEPARATE CONDUCTORS IN CHAMBER "C".

KEY	STOCK NO.	DESCRIPTION	QUANTITY	SBOX36D
1	42350224	SPLICE BOX, W/ DIVIDER, 36"x24"x18"	1	1
2	66265000	FUSE, INLINE SUBMERSIBLE	1	–
3	67507400	#4 COPPER, 3 CONDUCTORS	SPECIFY	–
4	42238502	CONNECTOR, #6 – 500 AL/CU, SUBMERSIBLE	3	–
5	SPECIFY	SECONDARY, 3 CONDUCTOR	SPECIFY	–
6	71291500	90 DEG. ELBOW, 2"	2	2
7	71009100	BELL END, 2"	3	3
8	71162000	PVC CONDUIT, 2"	SPECIFY	–
9	57878000	5/8" COPPER CLAD GROUND ROD, 8 FOOT	1	–
10	53711000	#4 COPPER, BARE	20'	–
11	57814000	GROUND ROD CLAMP	1	–
12	65122000	1" LFNC FLEX CONDUIT	SPECIFY	–
13	70200500	#10 COPPER, BLACK	SPECIFY	–
14	70200600	#10 COPPER, WHITE	SPECIFY	–
15	70200700	#10 COPPER, GREEN	SPECIFY	–
16	NA	CUSTOMER OWNED CONDUCTOR AND CONDUIT	NA	–

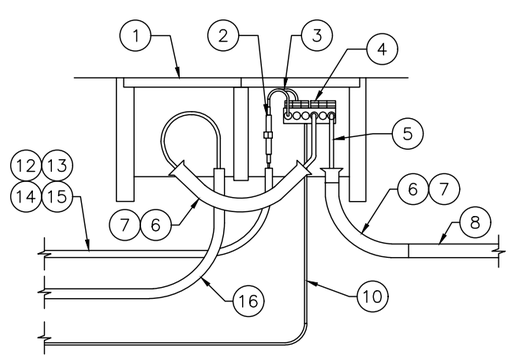

NOT ALL CONDUCTORS SHOWN FOR CLARITY

2 E-1 SPLICE BOX DETAILS
NOT TO SCALE

LOAD CENTER W/ SURGE PROTECTIVE DEVICE

PANEL NO.: LC1
CIRCUITS: 12 POSITION
ENCLOSURE TYPE: NEMA 4
MOUNTING: SURFACE
MODEL: RAYCAP #RSCAC-7239-P-240
(14"H X 9"W X 5.25"D, 0.38CU.FT.)

VOLTAGE/ PHASE/ WIRE: 120/240 VAC, OR 120/208 VAC, 1PH/3W, 60Hz
MAIN BUS: 200 AMP, 22,500A BRACING
MAIN BREAKER/ INTERRUPTING RATING: 100 AMP FRAME/ 100 AMP TRIP, 22,500 kAIC
(WITH NEUTRAL BAR, GROUND BAR, AND NEUTRAL-TO-GROUND MAIN BONDING JUMPER)
SPD RATING: 5kA DIRECT SURGE, 60kA INDUCED SURGE
CONNECTION: #6 AWG TO #2/0 AWG

CKT. NO.		DESCRIPTION	DEVICE	H1 (VA)	H2 (VA)	WIRE	GND	H1	H2	NOTES
1	A	GFCI RECEPTACLE	15A/ 1P	360		12	12			INTERNAL TO LOAD CENTER
	B	SPARE	15A/ 1P							
2	A	SPARE	15A/ 1P							
	B	ASODA AIRSCALE #1	15A/ 1P		344	12	12			
3	A	SPARE	15A/ 1P							
	B	ASODA AIRSCALE #2	15A/ 1P	344		12	12			
4	A	SPARE	15A/ 1P							
	B	LAA	15A/ 1P		344	12	12			
5	A	SPARE	30A/ 1P▲							
	B	SPARE	30A/ 1P							
6	A		30A/ 1P							
	B	SPARE	30A/ 1P▲							
		PHASE TOTAL		704	688					

PANEL TOTAL 1,392 VA

▲OR BREAKER TIED TOGETHER FOR 240VAC, 1PH OPERATION

PANEL CAPACITY - 24 KVA

NOTES:
1. LOAD CENTER IS SUPPLIED WITH MAIN BREAKER ONLY. CONTRACTOR SHALL PROVIDE ALL BRANCH BREAKERS AS INDICATED.

3 E-1 RAYCAP METER/DISCONNECT PANEL DETAILS
NOT TO SCALE

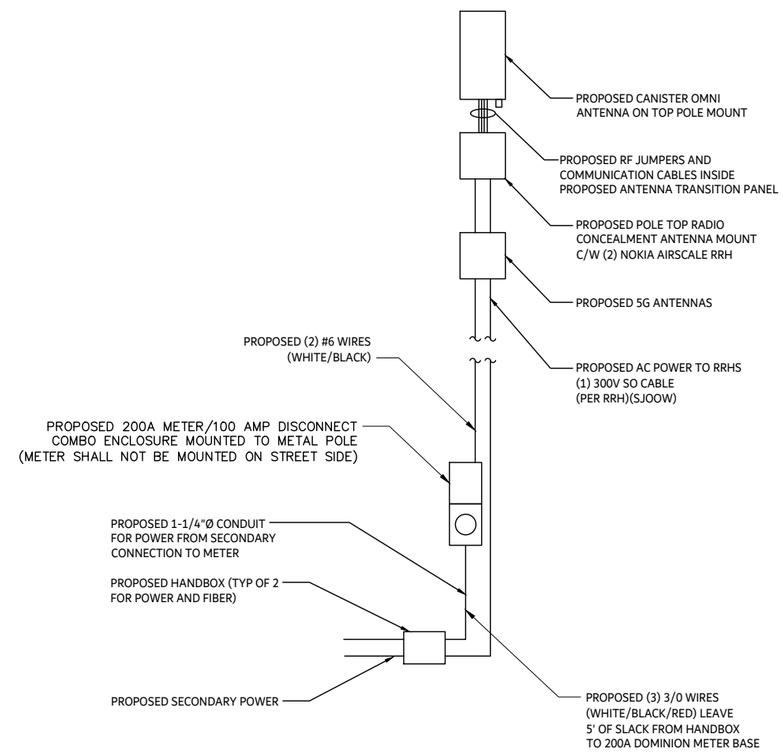

3 E-1 AC ONE-LINE DIAGRAM
NOT TO SCALE

AT&T
smartlink
Trylon
1825 W. WALNUT HILL LANE, SUITE 120
IRVING, TEXAS 75038
1-855-669-5421

SUBMITTALS

REV	DATE	DESCRIPTION	BY
1	05/27/20	CLIENT COMMENTS	DB

RELEASED BY	DATE
MATTHEW JAMERSON	05/27/21

COMMONWEALTH OF VIRGINIA
MATTHEW K. JAMERSON
Lic. No. 0402061949
PROFESSIONAL ENGINEER

UNAUTHORIZED ALTERATION OR ADDITIONS TO A PLAN BEARING THE SEAL OF A LICENSED ENGINEER OR LAND SURVEYOR IS A VIOLATION OF LOCAL LAW

PROFESSIONAL CERTIFICATION. I HEREBY CERTIFY THAT THESE DOCUMENTS WERE PREPARED OR APPROVED BY ME, AND THAT I AM A DULY LICENSED PROFESSIONAL ENGINEER UNDER THE LAWS OF THE STATE OF VIRGINIA, LICENSE NO. 0402061949 EXP. 03/12/2022

ORIGINAL SIZE IN INCHES

SITE INFORMATION
AT&T NEW CRAN BUILD

SITE ADDRESS
CRAN_RWSH_ALEXA_045G
432 SOUTH COLUMBUS STREET
ALEXANDRIA, VA 22314

SHEET TITLE
AC PANEL INFORMATION

SHEET NUMBER
E-1

BASIC ELECTRICAL NOTES

1. THE WORK INCLUDES FURNISHING AND INSTALLING THE MATERIAL, EQUIPMENT AND SYSTEMS COMPLETE AS SPECIFIED AND/OR INDICATED ON THE DRAWINGS. THE ELECTRICAL INSTALLATIONS, WHEN FINISHED, SHALL BE COMPLETE AND COORDINATED AND READY FOR SATISFACTORY SERVICE.

2. ALL WORK UNDER THIS CONTRACT SHALL BE DONE IN STRICT ACCORDANCE WITH ALL APPLICABLE MUNICIPAL, STATE, BOCA, AND LOCAL ELECTRICAL CODES THAT GOVERN EACH PARTICULAR TRADE AND THE 2014 NATIONAL ELECTRICAL CODE.

3. THE CONTRACTOR SHALL COORDINATE THE ELECTRICAL EQUIPMENT INSTALLATION WITH ALL TRADES.

4. THE CONTRACTOR SHALL MAKE APPLICATION AND PAY ALL CHARGES FOR ALL NECESSARY PERMITS, LICENSES, AND INSPECTIONS AS REQUIRED UNDER THE ABOVE CODES. UPON COMPLETION OF THE WORK, THE CUSTOMARY CERTIFICATIONS OF APPROVAL SHALL BE FURNISHED.

5. NO MATERIALS OR EQUIPMENT SHALL BE USED IN THE WORK UNTIL APPROVED. ALL MATERIALS SHALL BE U.L. LISTED.

6. THE CONTRACTOR SHALL EXAMINE ALL DRAWINGS AND SHALL INSPECT THE EXISTING CONDITIONS OF THE SITE. FAILURE TO COMPLY WITH THIS REQUIREMENT WILL NOT RELIEVE THE CONTRACTOR OF RESPONSIBILITY FOR COMPLYING WITH THE CONTRACTOR DOCUMENTS.

7. THE DRAWINGS INDICATE THE GENERAL ARRANGEMENTS OF THE ELECTRICAL INSTALLATIONS. DETAILS OF PROPOSED DEPARTURES DUE TO ACTUAL FIELD CONDITIONS OR OTHER CAUSES SHALL BE SUBMITTED FOR APPROVAL PRIOR TO INSTALLATION. REWORK OF COMPLETED ITEMS DUE TO IMPROPER FIELD COORDINATION SHALL BE AT THE CONTRACTORS EXPENSE.

8. PROVIDE SUFFICIENT ACCESS AND CLEARANCE FOR ALL ITEMS OF EQUIPMENT REQUIRING SERVICING AND MAINTENANCE.

9. THE CONTRACTOR SHALL PERFORM ALL NECESSARY CUTTING AND PATCHING AS REQUIRED TO COMPLETE THE INSTALLATIONS. PATCHING OF WALLS, FLOORS, CEILINGS, ETC. SHALL MATCH THE ADJACENT SURFACES.

10. THE CONTRACTOR SHALL PREPARE THREE (3) COPIES OF A RECORD AN INFORMATION BOOKLET. THE BOOKLET SHALL BE BOUND IN A THREE RING LOOSE-LEAD BINDER AND INCLUDE ALL ITEMS OF ELECTRICAL EQUIPMENT.

11. UPON COMPLETION OF THE ELECTRICAL INSTALLATION, THE CONTRACTOR SHALL PROVIDE A COMPLETE SET OF PRINTS OF THE ELECTRICAL CONTRACT DRAWINGS WHISH SHALL BE LEGIBLY MARKED IN RED TO SHOW ALL CHANGES AND DEPARTURE OF THE INSTALLATIONS COMPLETED WITH THE ORIGINAL DESIGN. THEY SHALL BE SUITABLE FOR USE IN PREPARATION OF RECORD DRAWINGS.

12. GUARANTEE: ALL NEW ELECTRICAL INSTALLATIONS SHALL BE GUARANTEED FOR A PERIOD OF ONE (1) YEAR BEGINNING THE DAY OF THE FINAL ACCEPTANCE OF THE WORK OR BENEFICIALLY OCCUPANCY OF THE OWNER, WHICHEVER OCCURS FIRST. THE ABOVE SHALL NOT IN ANY WAY VOID OR ABROGATED EQUIPMENT MANUFACTURER'S GUARANTEE OR WARRANTY. CERTIFICATES OF GUARANTEE SHALL BE DELIVERED TO THE OWNER. UPON RECEIPT OF THE NOTICE FROM THE OWNER OF FAILURE OF ANY PART OF THE ELECTRICAL INSTALLATION DURING THE GUARANTEE PERIOD, NEW REPLACEMENT PARTS SHALL BE FURNISHED AND INSTALLED PROMPTLY AND AT NO COST TO AT&T.

13. ANY ELECTRICAL WORK WHICH WILL INTERFERE WITH THE NORMAL USE OF THE BUILDING IN ANY MANNER SHALL BE DONE AT SUCH TIME OR TIMES AS SHALL BE MUTUALLY AGREED UPON BETWEEN THE CONTRACTOR AND THE AT&T REPRESENTATIVE.

14. SUPPORTS, HANGERS, AND FOUNDATIONS: PROVIDE ALL SUPPORTS, HANGERS, BRACES, ATTACHMENTS, AND FOUNDATIONS REQUIRED FOR THE WORK. SUPPORT AND SET THE WORK IN A THOROUGHLY SUBSTANTIAL AND WORKMANLIKE MANNER WITHOUT PLACING STRAINS ON THE MATERIALS, EQUIPMENT, OR THE BUILDING STRUCTURE. SUPPORTS, HANGERS, BRACES AND ATTACHMENTS SHALL BE STANDARD MANUFACTURED ITEMS OR FABRICATED STRUCTURAL STEEL SHAPES.

15. THERE SHALL BE NO INTERRUPTION OF POWER TO EXISTING ELECTRICAL SYSTEMS WITHOUT PRIOR CONSENT FROM AT&T. SUCH INTERRUPTIONS SHALL BE KEPT TO A MINIMUM AND SHALL BE SCHEDULED WITH THE OWNER AT LEAST THREE BUSINESS DAYS IN ADVANCE OF THE OUTAGE. ANY COST FOR WORK THAT MUST BE DONE ON AN OVERTIME BASIS SHALL BE INCLUDED IN THE BID.

16. MOUNTING AND SUPPORTING OF ALL EQUIPMENT PROVIDED BY THIS CONTRACTOR SHALL BE COORDINATED WITH AT&T IN THE FIELD.

17. PROVIDE ALL CUTTING AND PATCHING NECESSARY FOR THE INSTALLATION OF THE ELECTRICAL WORK. ANY DAMAGE DONE TO THE WORK ALREADY IN PLACE BY REASON OF THIS WORK SHALL BE REPAIRED AT THE CONTRACTOR'S EXPENSE BY A QUALIFIED MECHANIC EXPERIENCED IN SUCH WORK. PATCHING SHALL BE UNIFORMED IN APPEARANCE AND SHALL MATCH THE SURROUNDING SURFACE. ALL PENETRATIONS THROUGH WALLS OF NEW ROOM SHALL BE SEALED WEATHERTIGHT.

SERVICE & DISTRIBUTION

A. ELECTRICAL SERVICE:

1. ELECTRICAL POWER TO THE NEW EQUIPMENT SHALL BE EXTENDED FROM THE PROPOSED UTILITY COMPANY METER AND PROPOSED SERVICE ENTRANCE RATED LOAD CENTER PANEL MOUNTED ON UTILITY POLE.

B. COMMUNICATIONS SERVICE:

1. TELEPHONE SERVICES SHALL BE EXTENDED BY THE TELEPHONE COMPANY. PROVIDE SERVICE CONDUITS, BACKBOARDS, SLEEVES, AND OTHER EQUIPMENT SHOWN ON THE DRAWINGS FOR USE BY THE TELEPHONE COMPANY. ALL CHARGES BY THE UTILITY COMPANY SHALL BE PAID BY THE OWNER.

2. ALL ELBOWS IN CONDUITS RUNS SHALL BE WIDE SWEEP FIELD BENDS. INSTALL PULL BOXES AS REQUIRED AND WHERE DIRECTED BY THE TELEPHONE COMPANY AND/OR AS REQUIRED BY THE NATIONAL ELECTRIC CODE.

BASIC ELECTRICAL MATERIALS & METHODS

A. CONDUIT & BOXES:

1. ALL CONDUIT SHALL BE NONMETALLIC ELECTRIC GRADE.

2. JUNCTION AND PULL BOXES SHALL BE FURNISHED AND INSTALLED AS SHOWN OR WHERE REQUIRED TO FACILITATE PULLING OF WIRES OR CABLES. SUCH BOXES SHALL BE INSTALLED IN ACCESSIBLE LOCATIONS. GASKETED COVER PLATES SHALL BE FURNISHED FOR OUTDOOR INSTALLATIONS.

3. ALL BOXES, WHETHER OUTLET, JUNCTION, PULL, OR EQUIPMENT SHALL BE FURNISHED WITH APPROPRIATE COVERS.

4. NO SECTIONALIZED BOXES SHALL BE USED.

5. ALL EMT CONDUIT FITTINGS SHALL BE COMPRESSION TYPE.

6. ALL FIELD CUTS OF GALVANIZED ITEMS SHALL BE BRUSHED WITH MARINE GRADE GALVANIZING.

7. ALL METALLIC OBJECTS EXPOSED TO WEATHER SHALL BE GALVANIZED.

B. WIRES & CABLE:

1. BUILDING WIRE, UNLESS OTHERWISE INDICATED, SHALL BE 600 VOLT, TYPE THWN INSULATION FOR INTERIOR AND EXTERIOR USE. CONDUCTORS SHALL BE SOFT DRAWN COPPER OF NOT LESS THAN 98% CONDUCTIVITY. NO ROMEX OR AC (BX) CABLE WILL BE ALLOWED ON THE PROJECT.

2. NO WIRE SMALLER THAN NO. TWELVE (12) AWG SHALL BE USED UNLESS OTHERWISE INDICATED. CONDUCTORS SHALL BE CONTINUOUS FROM OUTLET TO OUTLET AND FROM TERMINAL BOARD TO POINT OF FINAL CONNECTION, AND NO SPLICE SHALL BE MADE EXCEPT WITHIN OUTLET OR JUNCTION BOXES. ALL CONDUCTORS SHALL BE OF THE SIZES AS INDICATED. ALL WIRES NO. EIGHT (8) AWG AND LARGER SHALL BE STRANDED. THE CONTRACTOR SHALL MAKE WIRING CONNECTIONS OF ALL ELECTRICAL EQUIPMENT REQUIRING ELECTRICAL SERVICE. WIRES AND CABLES SHALL BE AS MANUFACTURED BY PIRELLI, ROYAL, AND TRIANGLE OR EQUIVALENT.

3. ALL WIRING SHALL BE COLOR CODED. MATCH EXISTING SYSTEM COLOR CODING WHERE APPLICABLE.

C. DISCONNECTS:

1. FURNISH AND INSTALL SAFETY SWITCHES WHERE INDICATED AND AS REQUIRED FOR MOTOR OUTLETS OR OTHER EQUIPMENT. SWITCHES SHALL BE OF SIZE, NUMBER OF POLES AND FUSED OR NON-FUSED, AS REQUIRED FOR JOB CONDITIONS AND THE NATIONAL ELECTRICAL CODE.

D. DISCONNECTS:

1. PROVIDE GROUND FRO ALL RACEWAYS, DEVICES, AND UTILIZATION EQUIPMENT PERMANENTLY AND EFFECTIVELY IN ACCORDANCE WITH THE NATIONAL ELECTRICAL CODE, AS HEREINAFTER SPECIFIED. ALL GROUNDING AND BONDING CONNECTIONS SHALL BE SOLDERLESS.

2. PROVIDE INSULATED GROUNDING CONDUCTORS FOR FEEDER AND BRANCH CIRCUIT WIRING AS CALLED FOR ON THE PLANS. PROVIDE GROUNDING BLOCKS, TERMINALS ETC., FOR CONNECTION OF GROUND WIRE IN ALL DISTRIBUTION EQUIPMENT.

AT&T

smartlink

Trylon

1825 W. WALNUT HILL LANE, SUITE 120
IRVING, TEXAS 75038
1-855-669-5421

SUBMITTALS

REV	DATE	DESCRIPTION	BY
1	05/27/20	CLIENT COMMENTS	DB

RELEASED BY	DATE
MATTHEW JAMERSON	05/27/21

COMMONWEALTH OF VIRGINIA
MATTHEW K. JAMERSON
Lic. No. 0402061949
PROFESSIONAL ENGINEER

UNAUTHORIZED ALTERATION OR ADDITIONS TO A PLAN BEARING THE SEAL OF A LICENSED ENGINEER OR LAND SURVEYOR IS A VIOLATION OF LOCAL LAW

PROFESSIONAL CERTIFICATION. I HEREBY CERTIFY THAT THESE DOCUMENTS WERE PREPARED OR APPROVED BY ME, AND THAT I AM A DULY LICENSED PROFESSIONAL ENGINEER UNDER THE LAWS OF THE STATE OF VIRGINIA, LICENSE NO. 0402061949 EXP. 03/12/2022

ORIGINAL SIZE IN INCHES

SITE INFORMATION

AT&T NEW CRAN BUILD

SITE ADDRESS

CRAN_RWSH_ALEXA_045G
432 SOUTH COLUMBUS STREET
ALEXANDRIA, VA 22314

SHEET TITLE

ELECTRICAL NOTES

SHEET NUMBER

E-2

DRAWING NOTES:

1. PROPOSED UTILITY COMPANY 200 AMP METER/ 100 AMP DISCONNECT COMBO MOUNTED ON UTILITY POLE BELOW RRH CABINET. NEW METER GLOBE PROVIDED AND INSTALLED BY UTILITY COMPANY. PROVIDE PHENOLIC NAMEPLATE READING "AT&T WIRELESS".
2. EXTEND 2" SCH. 40 PVC CONDUIT FROM NEW ELECTRIC VAULT TO NEW POLE (APPROX. 10' FOR ELECTRIC)
3. EXTEND SIX (6) PAIR FIBER FROM PROPOSED OMNI-TAP TO SERVE NOKIA ANTENNA/RADIO UNITS MOUNTED ON UTILITY POLE.
4. PROPOSED LOCATION OF REMOTE RADIO HEAD MOUNTED ON EQUIPMENT BRACKET. REFER TO STRUCTURAL FOR DETAILS.
5. AT&T WIRELESS PROVIDED AND CONTRACTOR INSTALLED ANTENNA MOUNTED ON TOP OF UTILITY POLE.
6. ALL EQUIPMENT / CONDUITS MOUNTED ON POLE SHALL BE PAINT TO MATCH EXISTING POLE CONDITIONS. COORDINATE FINAL PAINT COLOR WITH AT&T WIRELESS REPRESENTATIVE IN THE FIELD.
7. EXTEND COAX CABLES FROM BOTTOM OF REMOTE RADIO HEAD TO ANTENNA MOUNTED ON TOP OF UTILITY POLE. COORDINATE FINAL COAX SIZE WITH AT&T REPRESENTATIVE.
8. AT&T WIRELESS PROVIDED AND CONTRACTOR INSTALLED UTILITY POLE TOP ANTENNA MOUNT.
9. EXTENDED 6 #12 AWG + #12 GROUND - 3/4" GREY PVC CONDUIT FROM PANEL / EACH 15AMP BREAKER (TYP. OF 2) VERTICALLY UP UTILITY POLE TO SERVE EACH NOKIA ANTENNA / RADIO UNIT MOUNTED ON UTILITY POLE (TYP. OF 2). REFER TO PANEL SCHEDULE, SHEET C-5, FAR ADDITIONAL INFORMATION.

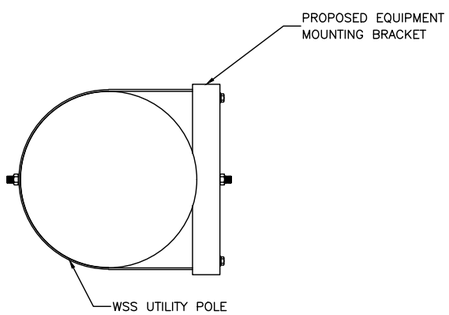

1 E-3 **UTILITY POLE EQUIPMENT PLAN**
NOT TO SCALE

N

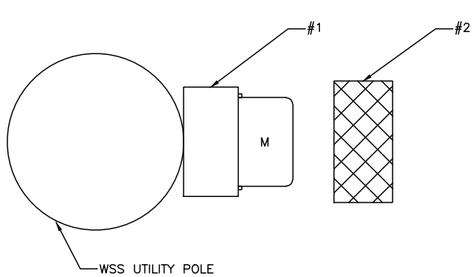

2 E-3 **UTILITY POLE POWER PLAN**
NOT TO SCALE

N

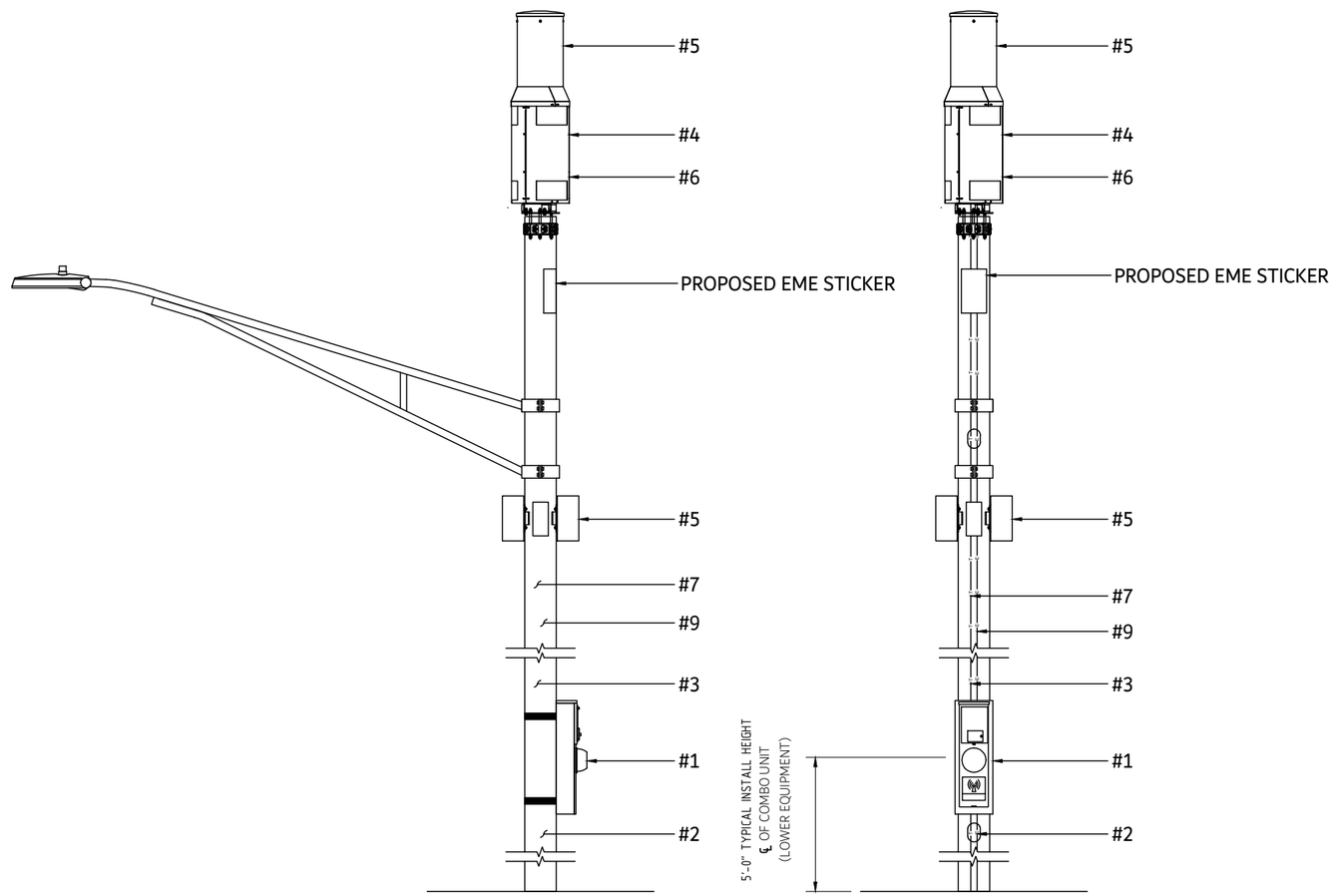

3 E-3 **UTILITY POLE ONE-LINE DETAIL**
NOT TO SCALE

AT&T

smartlink

Trylon
1825 W. WALNUT HILL LANE, SUITE 120
IRVING, TEXAS 75038
1-855-669-5421

SUBMITTALS

REV	DATE	DESCRIPTION	BY
1	05/27/20	CLIENT COMMENTS	DB

RELEASED BY	DATE
MATTHEW JAMERSON	05/27/21

COMMONWEALTH OF VIRGINIA
MATTHEW K. JAMERSON
Lic. No. 0402061949
PROFESSIONAL ENGINEER

UNAUTHORIZED ALTERATION OR ADDITIONS TO A PLAN BEARING THE SEAL OF A LICENSED ENGINEER OR LAND SURVEYOR IS A VIOLATION OF LOCAL LAW

PROFESSIONAL CERTIFICATION. I HEREBY CERTIFY THAT THESE DOCUMENTS WERE PREPARED OR APPROVED BY ME, AND THAT I AM A DULY LICENSED PROFESSIONAL ENGINEER UNDER THE LAWS OF THE STATE OF VIRGINIA, LICENSE NO. 0402061949 EXP. 03/12/2022

0 1 2 3
ORIGINAL SIZE IN INCHES

SITE INFORMATION

AT&T NEW CRAN BUILD

SITE ADDRESS

CRAN_RWSH_ALEXA_045G
432 SOUTH COLUMBUS STREET
ALEXANDRIA, VA 22314

SHEET TITLE

ELECTRICAL DETAILS

SHEET NUMBER

E-3

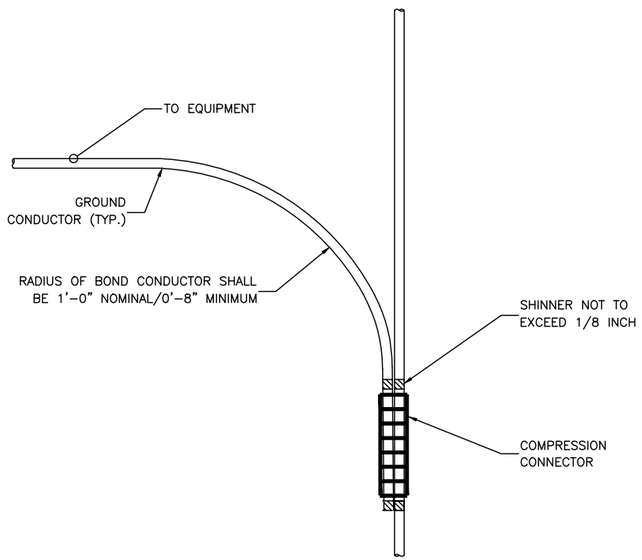

1 / E-4 DIRECTIONAL SPLICE DETAIL

NOT TO SCALE

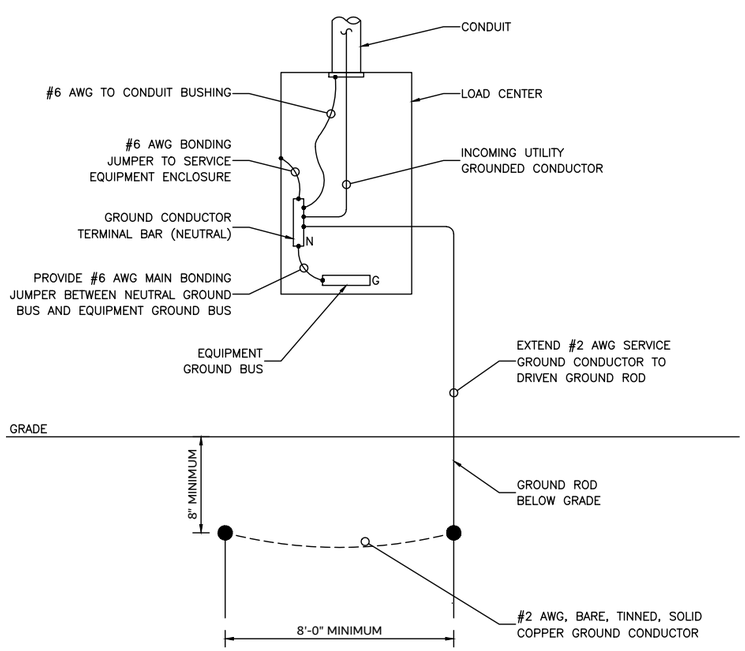

2 / E-4 ELECTRICAL SERVICE GROUNDING ELECTRODE DETAIL

NOT TO SCALE

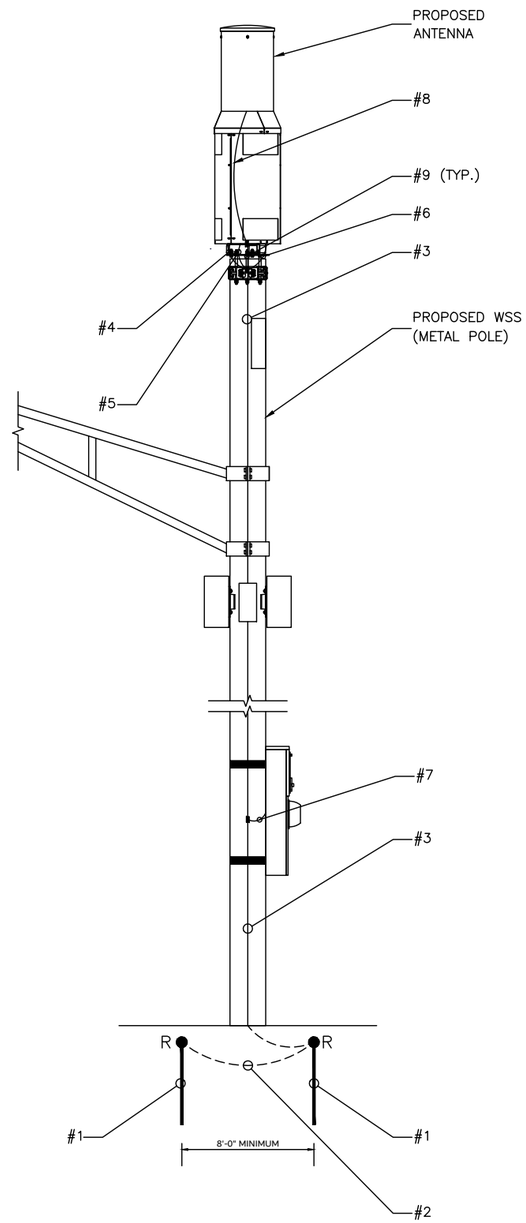

3 / E-4 UTILITY POLE GROUNDING DIAGRAM

NOT TO SCALE

DRAWING NOTES:

1. PROVIDE 8'-0" (MINIMUM) x 5/8" COPPER CLAD STEEL GROUND ROD.
2. BURIED GROUND RING SHALL BE #2 AWG, BARE, TINNED, SOLID COPPER.
3. EXTEND 1#2 AWG GREEN, INSULATED, STRANDED COPPER GROUND CONDUCTOR FROM BURIED GROUND ROD AND EXTEND VERTICALLY UP UTILITY POLE FOR EQUIPMENT GROUNDING.
4. EXTEND 1#6 AWG, INSULATED, STRANDED, COPPER GROUND CONDUCTOR FROM EQUIPMENT FRAME AND BOND TO PROPOSED GROUND CONDUCTOR EXTENDING TO BURIED GROUND ROD.
5. EXTEND 1#6 AWG, INSULATED, STRANDED, COPPER GROUND CONDUCTOR FROM POWER SUPPLY UNIT (PSU) AND BOND TO PROPOSED GROUND CONDUCTOR EXTENDING TO BURIED GROUND ROD.
6. EXTEND 1#6 AWG, INSULATED, STRANDED, COPPER GROUND CONDUCTOR FROM REMOTE RADIO HEAD AND BOND TO PROPOSED GROUND CONDUCTOR EXTENDING TO BURIED GROUND ROD.
7. EXTEND 1#2 AWG GREEN, INSULATED, STRANDED COPPER GROUND CONDUCTOR FROM ENCLOSURE OF PROPOSED LOAD CENTER PANEL AND BOND TO BURIED GROUND ROD. REFER TO SERVICE GROUNDING DETAIL, THIS SHEET.
8. EXTEND 1#2 AWG GREEN, INSULATED, STRANDED COPPER GROUND CONDUCTOR FROM ANTENNA MOUNT AND BOND TO TO PROPOSED GROUND CONDUCTOR EXTENDING TO BURIED GROUND ROAD.
9. EXTEND 1#6 AWG, GREEN INSULATED, STRANDED COPPER GROUND CONDUCTOR FROM EACH NOKIA ANTENNA/RADIO UNIT AND BOND TO GROUND CONDUCTOR EXTENDING DOWN UTILITY POLE TO GROUND BAR MOUNTED IN ENCLOSURE. (NOT SHOWN FOR CLARITY)

GROUNDING GENERAL NOTES:

1. ALL GROUNDING CONNECTIONS BELOW GRADE SHALL BE EXOTHERMIC (CADWELD) TO NEAREST GROUND ROD USING ERICO CADWELD "ONE-SHOT" CONNECTIONS.
2. ALL EXTERIOR GROUND CONDUCTORS SHALL BE #2 AWG BARE, TINNED SOLID COPPER, UNLESS NOTED OTHERWISE.
3. ALL GROUND CONNECTIONS ABOVE GROUND SHALL BE TWO-HOLE COPPER COMPRESSION TYPE WITH STANDARD LENGTH BARREL (BURNDY# YA2CL-2TC14EI). SINGLE HOLE LUGS ARE NOT ACCEPTABLE.
4. ALL MOUNTING HARDWARE FOR EXTERIOR LOCATIONS SHALL BE GALVANIZED INCLUDING NUTS, BOLTS, FLAT AND LOCK WASHERS.
5. ALL EXTERIOR MECHANICAL CONNECTIONS SHALL BE MADE USING OXIDE-INHIBITING JOINT COMPOUND. THE COMPOUND SHALL BE APPLIED TO ALL SURFACES OF BOLTS, WASHERS, NUTS AND CONNECTION SURFACES OF GROUND BAR PLATES. ALL BARE COPPER SURFACES OF CONDUCTORS SHALL BE COATED PRIOR TO LUGGING. JOINT COMPOUND SHALL BE NO-OX.
6. ALL EXOTHERMIC WELD CONNECTIONS AND FIELD CUTS OF METALLIC OBJECTS EXPOSED TO WEATHER SHALL BE FIRST SPRAYED WITH COLD GALVANIZING (AFTER COOL DOWN) THEN BE TOPPED WITH BRUSH ON MARIN GRADE GALVANIZING.
7. ALL CONDUIT USED AS SLEEVES FOR GROUNDING OR BONDING CONDUCTORS SHALL BE PVC.
8. ALL GROUND RODS SHALL BE DRIVEN VERTICALLY USING A GROUND ROD SHIELD TO PREVENT THE ENDS FROM "MUSHROOMING".
9. THE MAXIMUM RESISTANCE OF THE COMPLETED GROUND SYSTEM SHALL NOT EXCEED 5 OHMS ON ANY PART OF THE SYSTEM. IF DUE TO SOIL CONDITIONS OR OTHER PARAMETERS, THIS MAXIMUM IS EXCEEDED, CONTRACT LYNCOLE FOR XIT GROUNDING DESIGN.
10. ALL EXTERIOR GROUND BARS SHALL BE GALVANIZED STEEL, SIZE AS NOTED ON PLANS, AND MANUFACTURED BY ELECTRIC MOTIONS COMPANY, INC. (WWW.ELECTRICMOTIONSCOMPANY.COM).
11. JOINT COMPOUND FOR GROUNDING SHALL BE NO-OX.

NOTES:
1. GROUND ROD TO BE INSTALLED IN UNDISTURBED EARTH.
2. THIS POLE CAN SERVE TWO STREETLIGHT BRACKETS ON OPPOSITE SIDES. SERVE SECOND STREETLIGHT WITH SEPARATE CONDUCTORS IN CHAMBER "C".

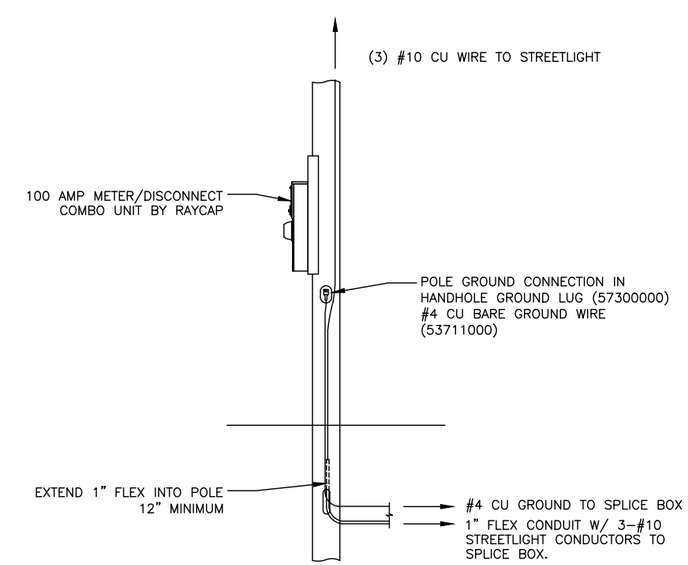

AT&T

smartlink

Trylon

1825 W. WALNUT HILL LANE, SUITE 120
IRVING, TEXAS 75038
1-855-669-5421

SUBMITTALS

REV	DATE	DESCRIPTION	BY
1	05/27/20	CLIENT COMMENTS	DB

RELEASED BY	DATE
MATTHEW JAMERSON	05/27/21

COMMONWEALTH OF VIRGINIA
MATTHEW K. JAMERSON
Lic. No. 0402061949
PROFESSIONAL ENGINEER

UNAUTHORIZED ALTERATION OR ADDITIONS TO A PLAN BEARING THE SEAL OF A LICENSED ENGINEER OR LAND SURVEYOR IS A VIOLATION OF LOCAL LAW

PROFESSIONAL CERTIFICATION. I HEREBY CERTIFY THAT THESE DOCUMENTS WERE PREPARED OR APPROVED BY ME, AND THAT I AM A DULY LICENSED PROFESSIONAL ENGINEER UNDER THE LAWS OF THE STATE OF VIRGINIA, LICENSE NO. 0402061949 EXP. 03/12/2022

ORIGINAL SIZE IN INCHES

SITE INFORMATION

AT&T NEW CRAN BUILD

SITE ADDRESS

CRAN_RWSH_ALEXA_045G
432 SOUTH COLUMBUS STREET
ALEXANDRIA, VA 22314

SHEET TITLE

ELECTRICAL DETAILS CONT.

SHEET NUMBER

E-4