ISSUE: Certificate of Appropriateness for alterations

APPLICANT: HF Entwisle LLC

LOCATION: 437 N. Columbus Street
Old & Historic Alexandria District

ZONE: RM/Residential Townhouse

STAFF RECOMMENDATION

Staff recommends approval of the Certificate of Appropriateness, as submitted.

GENERAL NOTES TO THE APPLICANT

1. APPEAL OF DECISION: In accordance with the Zoning Ordinance, if the Board of Architectural Review denies or approves an application in whole or in part, the applicant or opponent may appeal the Board's decision to City Council on or before 14 days after the decision of the Board.

2. COMPLIANCE WITH BAR POLICIES: All materials must comply with the BAR's adopted policies unless otherwise specifically approved.

3. BUILDING PERMITS: Most projects approved by the Board of Architectural Review require the issuance of one or more construction permits by Department of Code Administration (including signs). The applicant is responsible for obtaining all necessary construction permits after receiving Board of Architectural Review approval. Contact Code Administration, Room 4200, City Hall, 703-746-4200 for further information.

4. ISSUANCE OF CERTIFICATES OF APPROPRIATENESS AND PERMITS TO DEMOLISH: Applicants must obtain a copy of the Certificate of Appropriateness or Permit to Demolish PRIOR to applying for a building permit. Contact BAR Staff, Room 2100, City Hall, 703-746-3833, or preservation@alexandriava.gov for further information.

5. EXPIRATION OF APPROVALS NOTE: In accordance with Sections 10-106(B), 10-206(B) and 10-307 of the Zoning Ordinance, any Board of Architectural Review approval will expire 12 months from the date of issuance if the work is not commenced and diligently and substantially pursued by the end of that 12-month period.

6. HISTORIC PROPERTY TAX CREDITS: Applicants performing extensive, certified rehabilitations of historic properties may separately be eligible for state and/or federal tax credits. Consult with the Virginia Department of Historic Resources (VDHR) prior to initiating any work to determine whether the proposed project may qualify for such credits.

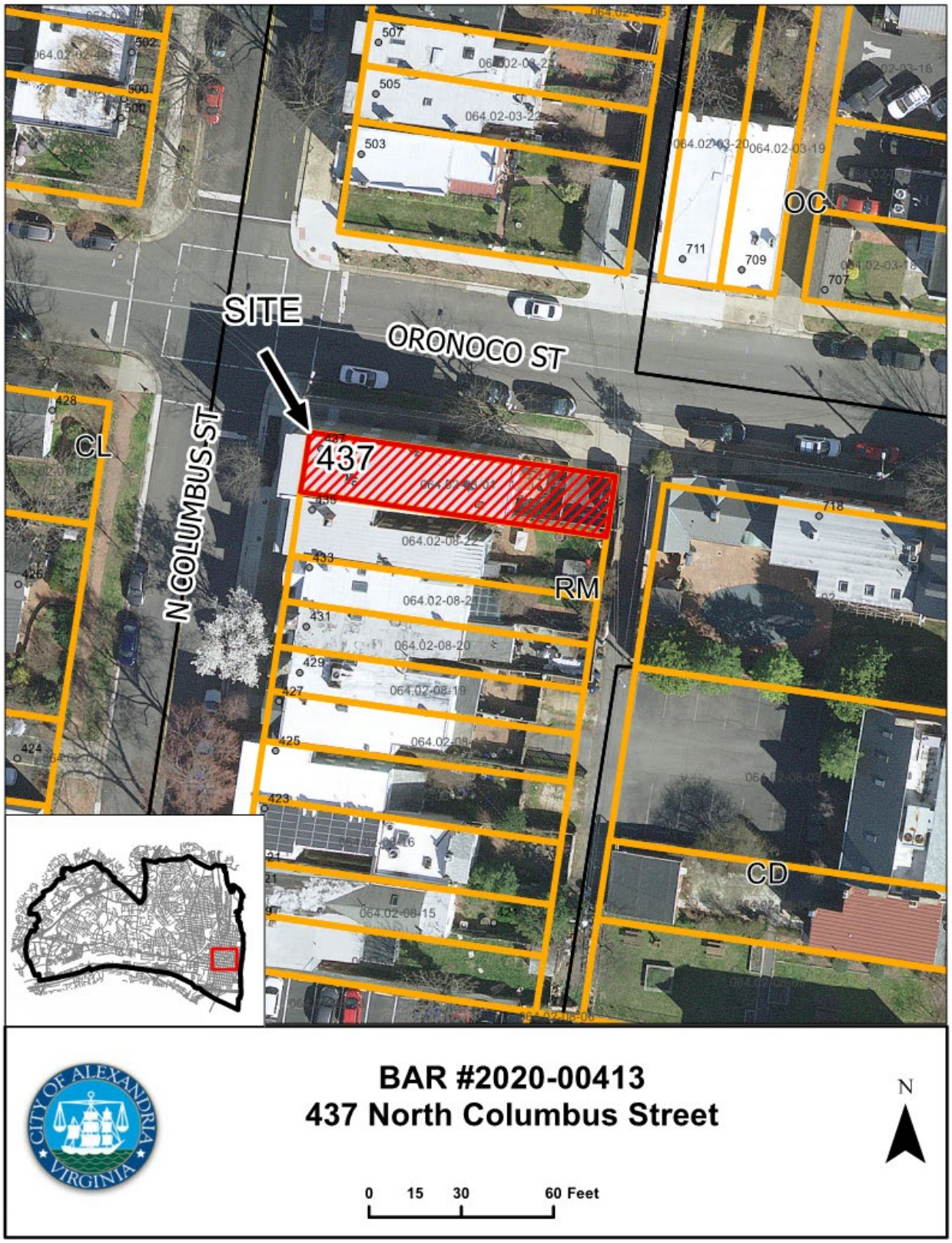
SITE
ORONOCO ST
N COLUMBUS ST
437
CL
RM
OC
CD
BAR #2020-00413
437 North Columbus Street
N
0 15 30 60 Feet

I. APPLICANT'S PROPOSAL

The applicant requests a Certificate of Appropriateness for alterations and repairs to the rear second and third floor porches at 437 N. Columbus Street.

The following alterations are proposed:

- Removal of the existing stair connecting the second and third floors
- Replacement of the wood columns, railings and trim
- Installation of a wood picket railing at the second-floor to match the third floor railing
- Replacement of the existing sloped roof with a new roof with the same slope.
- Painting all wood white

Figure 1: Existing

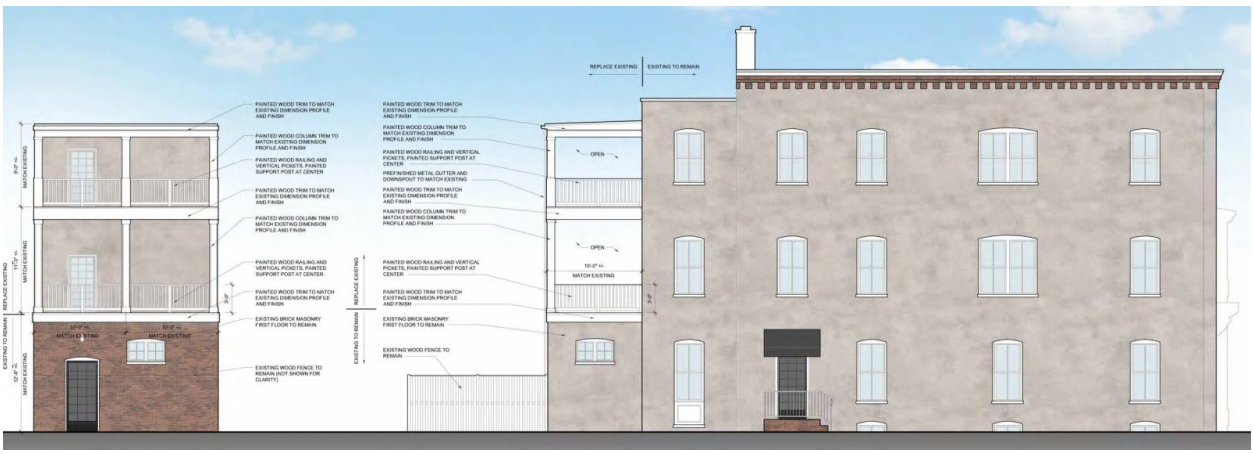

Figure 2: Proposed

Site context
The building is located on the corner of N. Columbus and Oronoco streets. The alley behind the subject property is private.

II. HISTORY

The three-story Italianate style masonry building was constructed as a grocery store sometime between **1896 and 1902**, according to Sanborn Fire Insurance Maps. The front façade retains many of the original details, including oversized brackets, decorative trim and two-over-two windows on the upper floors. The one-story masonry addition was constructed sometime between 1907 by 1912 (Sanborn).

Previous BAR Approvals

Staff could locate no previous BAR approvals for the subject property.

III. ANALYSIS

Staff finds that the proposed porch alterations comply with the following guidelines in the Porch chapter of the *Design Guidelines*: "Porches should be appropriate to the historical style of the structure" and "Porches should generally be painted the predominant color of the building or the color of the trim work." While staff believes that the porches do not date to the original period of construction, they may have been constructed as early as the early 20th century when the first-floor addition was constructed. There have been numerous repairs to the porches over the years, but the current condition requires more extensive repair and replacement to make them structurally sound. Staff is pleased that the applicant intends to use wood as the predominant replacement material and supports the replacement of the solid wood railing at the second story with historically appropriate wood pickets.

Staff recommends approval of the project, as submitted.

STAFF
Stephanie Sample, Historic Preservation Planner, Planning & Zoning
Tony LaColla, AICP, Land Use Services Division Chief, Planning & Zoning

IV. CITY DEPARTMENT COMMENTS

Legend: C- code requirement R- recommendation S- suggestion F- finding

Zoning
F-1 The proposed rear porch alterations comply with zoning.

Code Administration
F-1 A building permit and plan review are required prior to the start of construction.

Transportation and Environmental Services
CONDITIONS

R-1 The building permit must be approved and issued prior to the issuance of any permit for demolition, if a separate demolition permit is required. (T&ES)

R-2 Applicant shall be responsible for repairs to the adjacent city right-of-way if damaged during construction activity. (T&ES)

R-3 No permanent structure may be constructed over any existing private and/or public utility easements. It is the responsibility of the applicant to identify any and all existing easements on the plan. (T&ES)

FINDINGS

F-1 After review of the information provided, an approved grading plan is not required at this time. Please note that if any changes are made to the plan it is suggested that T&ES be included in the review. (T&ES)

F-2 If the alley located at the rear of the parcel is to be used at any point of the construction process the following will be required:
For a Public Alley - The applicant shall contact T&ES, Construction Permitting & Inspections at (703) 746-4035 to discuss any permits and accommodation requirements that will be required.
For a Private Alley - The applicant must provide proof, in the form of an affidavit at a minimum, from owner of the alley granting permission of use. (T&ES)

CODE REQUIREMENTS

C-1 The applicant shall comply with the City of Alexandria's Solid Waste Control, Title 5, Chapter 1, which sets forth the requirements for the recycling of materials (Sec. 5-1-99). (T&ES)

C-2 The applicant shall comply with the City of Alexandria's Noise Control Code, Title 11, Chapter 5, which sets the maximum permissible noise level as measured at the property line. (T&ES)

C-3 Roof, surface and sub-surface drains be connected to the public storm sewer system, if available, by continuous underground pipe. Where storm sewer is not available applicant must provide a design to mitigate impact of stormwater drainage onto adjacent properties and to the satisfaction of the Director of Transportation & Environmental Services. (Sec.5-6-224) (T&ES)

C-4 All secondary utilities serving this site shall be placed underground. (Sec. 5-3-3) (T&ES)

C-5 Any work within the right-of-way requires a separate permit from T&ES. (Sec. 5- 2) (T&ES)

C-6 All improvements to the city right-of-way such as curbing, sidewalk, driveway aprons, etc. must be city standard design. (Sec. 5-2-1) (T&ES)

V. ATTACHMENTS

1— Application for BAR 2020-00413: 437 N. Columbus Street
2 – Supplemental Materials

BAR Case # _____

ADDRESS OF PROJECT: 437 N. COLUMBUS STREET ALEXANDRIA, VIRGINIA 22314

DISTRICT: ☒ **Old & Historic Alexandria** ☐ **Parker – Gray** ☐ **100 Year Old Building**

TAX MAP AND PARCEL: 064.02-08-01 **ZONING:** RM

APPLICATION FOR: *(Please check all that apply)*

☒ CERTIFICATE OF APPROPRIATENESS

☐ PERMIT TO MOVE, REMOVE, ENCAPSULATE OR DEMOLISH
(Required if more than 25 square feet of a structure is to be demolished/impacted)

☐ WAIVER OF VISION CLEARANCE REQUIREMENT and/or YARD REQUIREMENTS IN A VISION CLEARANCE AREA (Section 7-802, Alexandria 1992 Zoning Ordinance)

☐ WAIVER OF ROOFTOP HVAC SCREENING REQUIREMENT
(Section 6-403(B)(3), Alexandria 1992 Zoning Ordinance)

Applicant: ☒ Property Owner ☐ Business *(Please provide business name & contact person)*

Name: HF ENTWISLE LLC

Address: 1707 DUKE ST.

City: ALEXANDRIA State: VA Zip: 22314

Phone: 703-549-6103 E-mail : dan@crhooff.com

Authorized Agent *(if applicable)*: ☐ Attorney ☐ Architect ☐ _____

Name: _____ Phone: _____

E-mail: _____

Legal Property Owner:

Name: H F ENTWISLE LLC

Address: 1707 DUKE STREET

City: ALEXANDRIA State: VA Zip: 22314

Phone: 703.549.6103 E-mail: dan@crhooff.com

☐ **Yes** ☒ **No** Is there an historic preservation easement on this property?
☐ **Yes** ☐ **No** If yes, has the easement holder agreed to the proposed alterations?
☐ **Yes** ☐ **No** Is there a homeowner's association for this property?
☐ **Yes** ☐ **No** If yes, has the homeowner's association approved the proposed alterations?

If you answered yes to any of the above, please attach a copy of the letter approving the project.

BAR Case # _____

NATURE OF PROPOSED WORK: *Please check all that apply*

- ☐ NEW CONSTRUCTION
- ☒ EXTERIOR ALTERATION: *Please check all that apply.*
  - ☐ awning
  - ☐ doors
  - ☐ lighting
  - ☐ fence, gate or garden wall
  - ☐ windows
  - ☐ pergola/trellis
  - ☐ HVAC equipment
  - ☐ siding
  - ☐ painting unpainted masonry
  - ☐ shutters
  - ☐ shed
  - ☒ other REPAIR/REPLACE EXISTING REAR EXTERIOR COVERED PORCH
- ☐ ADDITION
- ☐ DEMOLITION/ENCAPSULATION
- ☐ SIGNAGE

DESCRIPTION OF PROPOSED WORK: *Please describe the proposed work in detail (Additional pages may be attached).*

REMOVE AND REPLACE IN KIND DETERIORATED WOOD FRAME EXTERIOR COVERED PORCH ON SECOND AND THIRD FLOOR. EXISTING FIRST FLOOR MASONRY WALLS TO REMAIN. REPLACEMENT TO BE IN GENERAL APPEARANCE MATCHING EXISTING PAINTED WOOD TRIM, OMITTING THE EXISTING INTERNAL STAIR CONNECTING THE SECOND AND THIRD FLOORS.

SUBMITTAL REQUIREMENTS:

Items listed below comprise the **minimum supporting materials** for BAR applications. Staff may request additional information during application review. Please refer to the relevant section of the *Design Guidelines* for further information on appropriate treatments.

Applicants must use the checklist below to ensure the application is complete. Include all information and material that are necessary to thoroughly describe the project. Incomplete applications will delay the docketing of the application for review. Pre-application meetings are required for all proposed additions. All applicants are encouraged to meet with staff prior to submission of a completed application.

Demolition/Encapsulation : *All applicants requesting 25 square feet or more of demolition/encapsulation must complete this section. Check N/A if an item in this section does not apply to your project.*

	N/A	
☐	☒	Survey plat showing the extent of the proposed demolition/encapsulation.
☐	☒	Existing elevation drawings clearly showing all elements proposed for demolition/encapsulation.
☐	☒	Clear and labeled photographs of all elevations of the building if the entire structure is proposed to be demolished.
☐	☒	Description of the reason for demolition/encapsulation.
☐	☒	Description of the alternatives to demolition/encapsulation and why such alternatives are not considered feasible.

BAR Case # _____

Additions & New Construction: *Drawings must be to scale and should not exceed 11" x 17" unless approved by staff. Check N/A if an item in this section does not apply to your project.*

N/A

- ☐ ☐ Scaled survey plat showing dimensions of lot and location of existing building and other structures on the lot, location of proposed structure or addition, dimensions of existing structure(s), proposed addition or new construction, and all exterior, ground and roof mounted equipment.
- ☐ ☐ FAR & Open Space calculation form.
- ☐ ☐ Clear and labeled photographs of the site, surrounding properties and existing structures, if applicable.
- ☐ ☐ Existing elevations must be scaled and include dimensions.
- ☐ ☐ Proposed elevations must be scaled and include dimensions. Include the relationship to adjacent structures in plan and elevations.
- ☐ ☐ Materials and colors to be used must be specified and delineated on the drawings. Actual samples may be provided or required.
- ☐ ☐ Manufacturer's specifications for materials to include, but not limited to: roofing, siding, windows, doors, lighting, fencing, HVAC equipment and walls.
- ☐ ☐ For development site plan projects, a model showing mass relationships to adjacent properties and structures.

Signs & Awnings: *One sign per building under one square foot does not require BAR approval unless illuminated. All other signs including window signs require BAR approval. Check N/A if an item in this section does not apply to your project.*

N/A

- ☐ ☐ Linear feet of building: Front:_____Secondary front (if corner lot):_____.
- ☐ ☐ Square feet of existing signs to remain:_____.
- ☐ ☐ Photograph of building showing existing conditions.
- ☐ ☐ Dimensioned drawings of proposed sign identifying materials, color, lettering style and text.
- ☐ ☐ Location of sign (show exact location on building including the height above sidewalk).
- ☐ ☐ Means of attachment (drawing or manufacturer's cut sheet of bracket if applicable).
- ☐ ☐ Description of lighting (if applicable). Include manufacturer's cut sheet for any new lighting fixtures and information detailing how it will be attached to the building's facade.

Alterations: *Check N/A if an item in this section does not apply to your project.*

N/A

- ☐ ☐ Clear and labeled photographs of the site, especially the area being impacted by the alterations, all sides of the building and any pertinent details.
- ☐ ☐ Manufacturer's specifications for materials to include, but not limited to: roofing, siding, windows, doors, lighting, fencing, HVAC equipment and walls.
- ☒ ☐ Drawings accurately representing the changes to the proposed structure, including materials and overall dimensions. Drawings must be to scale.
- ☐ ☐ An official survey plat showing the proposed locations of HVAC units, fences, and sheds.
- ☐ ☐ Historic elevations or photographs should accompany any request to return a structure to an earlier appearance.

BAR Case # _____

ALL APPLICATIONS: *Please read and check that you have read and understand the following items:*

- [x] I have submitted a filing fee with this application. (Checks should be made payable to the City of Alexandria. Please contact staff for assistance in determining the appropriate fee.)
- [x] I understand the notice requirements and will return a copy of the three respective notice forms to BAR staff at least five days prior to the hearing. If I am unsure to whom I should send notice I will contact Planning and Zoning staff for assistance in identifying adjacent parcels.
- [x] I, the applicant, or an authorized representative will be present at the public hearing.
- [x] I understand that any revisions to this initial application submission (including applications deferred for restudy) must be accompanied by the BAR Supplemental form and revised materials.

The undersigned hereby attests that all of the information herein provided including the site plan, building elevations, prospective drawings of the project, and written descriptive information are true, correct and accurate. The undersigned further understands that, should such information be found incorrect, any action taken by the Board based on such information may be invalidated. The undersigned also hereby grants the City of Alexandria permission to post placard notice as required by Article XI, Division A, Section 11-301(B) of the 1992 Alexandria City Zoning Ordinance, on the property which is the subject of this application. The undersigned also hereby authorizes the City staff and members of the BAR to inspect this site as necessary in the course of research and evaluating the application. The applicant, if other than the property owner, also attests that he/she has obtained permission from the property owner to make this application.

APPLICANT OR AUTHORIZED AGENT:

Signature: Charles R. Hoffill

Printed Name: Charles R. Hoffill

Date: Aug 14, 2020

T: 202.822.9797 F: 202.785.0443
www.opxglobal.com
21 Dupont Circle NW / Washington, DC 20036

August 25, 2020

City of Alexandria Virginia
Alonzo Hicks, Plans Examiner III
Department of Code Administration
703.746.4195 Direct, 703.746.4200 Office
Alonzo.Hicks@alexandriava.gov

Re: 718 Oronoco Street / 437 N Columbus Street
BLDC2020-00717- Permit Review

Dear Mr. Hicks,

I am providing this correspondence for record in response to your permit review comment, and our subsequent conversation on the morning of Wednesday August 19, 2020 on the matter of the existing Means of Egress for this property.

As I've stated, It may not be clear in the application that the work is to be performed in accordance with the VEBC Alteration Level II, and that the existing exterior porch stair connects only the second and third floor porch areas. As it does not lead to the public way it does not and can not serve as a Means of Egress, so its removal in the replacement of the porch does not impact the existing egress.

The existing egress paths as well as the use and occupancy remain unchanged by the proposed work.

I have visited the property and personally observed the existing egress stair, which connects the three occupied residential units, one at each level: ground, two, and three. This existing interior stair appears to be original to the historic building, is centrally located in the floor plan, and leads directly to the public way on the north façade along Oronoco Street. Additional exits from the ground level unit are provided on the West along N Columbus Street, and on the East to the rear yard.

If I can assist you with further understanding my response with regard to this issue, please contact me at (202) 721-1686 or by email KTerzian@OPXGlobal.com.

Sincerely,

Ken Terzian, AIA, LEED AP BD+C
Principal
Cc: CF 3355-132

COMMONWEALTH OF VIRGINIA
KENNETH A. TERZIAN
NO. 007296
ARCHITECT

OWNERSHIP AND DISCLOSURE STATEMENT
Use additional sheets if necessary

1. Applicant. State the name, address and percent of ownership of any person or entity owning an interest in the applicant, unless the entity is a corporation or partnership, in which case identify each owner of more than three percent. The term ownership interest shall include any legal or equitable interest held at the time of the application in the real property which is the subject of the application.

Name	Address	Percent of Ownership
1. See attached documents		
2.		
3.		

2. Property. State the name, address and percent of ownership of any person or entityowning an interest in the property located at 437 N Columbus St., Alexandria, VA 22314 (address), unless the entity is a corporation or partnership, in which case identify each owner of more than three percent. The term ownership interest shall include any legal or equitable interest held at the time of the application in the real property which is the subject of the application.

Name	Address	Percent of Ownership
1 See attached documents		
2.		
3.		

3. Business or Financial Relationships. Each person or entity listed above (1 and 2), with an ownership interest in the applicant or in the subject property is required to disclose **any** business or financial relationship, as defined by Section 11-350 of the Zoning Ordinance, existing at the time of this application, or within the12-month period prior to the submission of this application with any member of the Alexandria City Council, Planning Commission, Boardof Zoning Appeals or either Boards of Architectural Review.

Name of person or entity	Relationship as defined by Section 11-350 of the Zoning Ordinance	Member of the Approving Body (i.e. City Council, Planning Commission, etc.)
1.		
2.		
3.		

NOTE: Business or financial relationships of the type described in Sec. 11-350 that arise after the filing of this application and before each public hearing must be disclosed prior to the public hearings.

As the applicant or the applicant's authorized agent, I hereby attest to the best of my ability that the information provided above is true and correct.

Aug 14 2020 Charles R Hoffman Charles R. Hoffman

Date Printed Name Signature

EXHIBIT A
MEMBERS, MEMBER GROUPS, INTERESTS AND CAPITAL ACCOUNTS

Member Group and Members	Interests	Capital Accounts
Hooff Group		
Hooff Associates Limited Partnership	40%	
Fagelson Group		
Bernard M. Fagelson 2012 Dynasty Trust	10%	
Helen C. Fagelson 2012 Dynasty Trust	10%	
John L. Fagelson and Karen C. Fagelson. Tenants by the Entirety	20%	
Billowitz-Holland Group		
Lorna P. Holland	1.670%	
C. Elizabeth Nugent	2.083%	
Mark E. F. Nugent	2.083%	
Patrick R. Nugent	2.083%	
Rebecca H. Nugent	2.083%	
Edward K Billowitz	3.330%	
Lorrain K. Melnicoff	3.330%	
Susan M. Pevenstein and Jack E. Pevenstein	3.330%	
TOTAL	100%	

Department of Planning and Zoning
Floor Area Ratio and Open Space Calculations
as of 12/20/18

B

A. Property Information

A1. 437 N. COLUMBUS ST. ALEXANDRIA, VIRGINIA 22315
Street Address

RM
Zone

A2. 2,000.00
Total Lot Area

x

Floor Area Ratio Allowed by Zone

= 0.00
Maximum Allowable Floor Area

B. Existing Gross Floor Area

Existing Gross Area	Allowable Exclusions**
Basement	Basement**
First Floor	Stairways**
Second Floor	Mechanical**
Third Floor	Attic less than 7'**
Attic	Porches**
Porches	Balcony/Deck**
Balcony/Deck	Lavatory***
Lavatory***	Other**
Other**	Other**
B1. Total Gross 0.00	**B2. Total Exclusions** 0.00

B1. 0.00 Sq. Ft.
Existing Gross Floor Area*

B2. 0.00 Sq. Ft.
Allowable Floor Exclusions**

B3. 0.00 Sq. Ft.
Existing Floor Area Minus Exclusions
(subtract B2 from B1)

Comments for Existing Gross Floor Area

C. Proposed Gross Floor Area

Proposed Gross Area	Allowable Exclusions**
Basement	Basement**
First Floor	Stairways**
Second Floor	Mechanical**
Third Floor	Attic less than 7'**
Attic	Porches**
Porches	Balcony/Deck**
Balcony/Deck	Lavatory***
Lavatory***	Other**
Other	Other**
C1. Total Gross 0.00	**C2. Total Exclusions** 0.00

C1. 0.00 Sq. Ft.
Proposed Gross Floor Area*

C2. 0.00 Sq. Ft.
Allowable Floor Exclusions**

C3. 0.00 Sq. Ft.
Proposed Floor Area Minus Exclusions
(subtract C2 from C1)

D. Total Floor Area

D1. 0.00 Sq. Ft.
Total Floor Area *(add B3 and C3)*

D2. 0.00 Sq. Ft.
Total Floor Area Allowed by Zone *(A2)*

E. Open Space

E1. Sq. Ft.
Existing Open Space

E2. Sq. Ft.
Required Open Space

E3. Sq. Ft.
Proposed Open Space

Notes

**Gross floor area is the sum of all areas under roof of a lot, measured from the face of exterior walls, including basements, garages, sheds, gazebos, guest buildings and other accessory buildings.*

*** Refer to the Zoning Ordinance (Section 2-145(B)) and consult with Zoning Staff for information regarding allowable exclusions. Sections may also be required for some exclusions.*

****Lavatories may be excluded up to a maximum of 50 square feet, per lavatory. The maximum total of excludable area for lavatories shall be no greater than 10% of gross floor area.*

The undersigned hereby certifies and attests that, to the best of his/her knowledge, the above computations are true and correct.

Signature: _____ Date: Aug 17, 2020

Hooff Associates Limited Partnership

Organization Chart

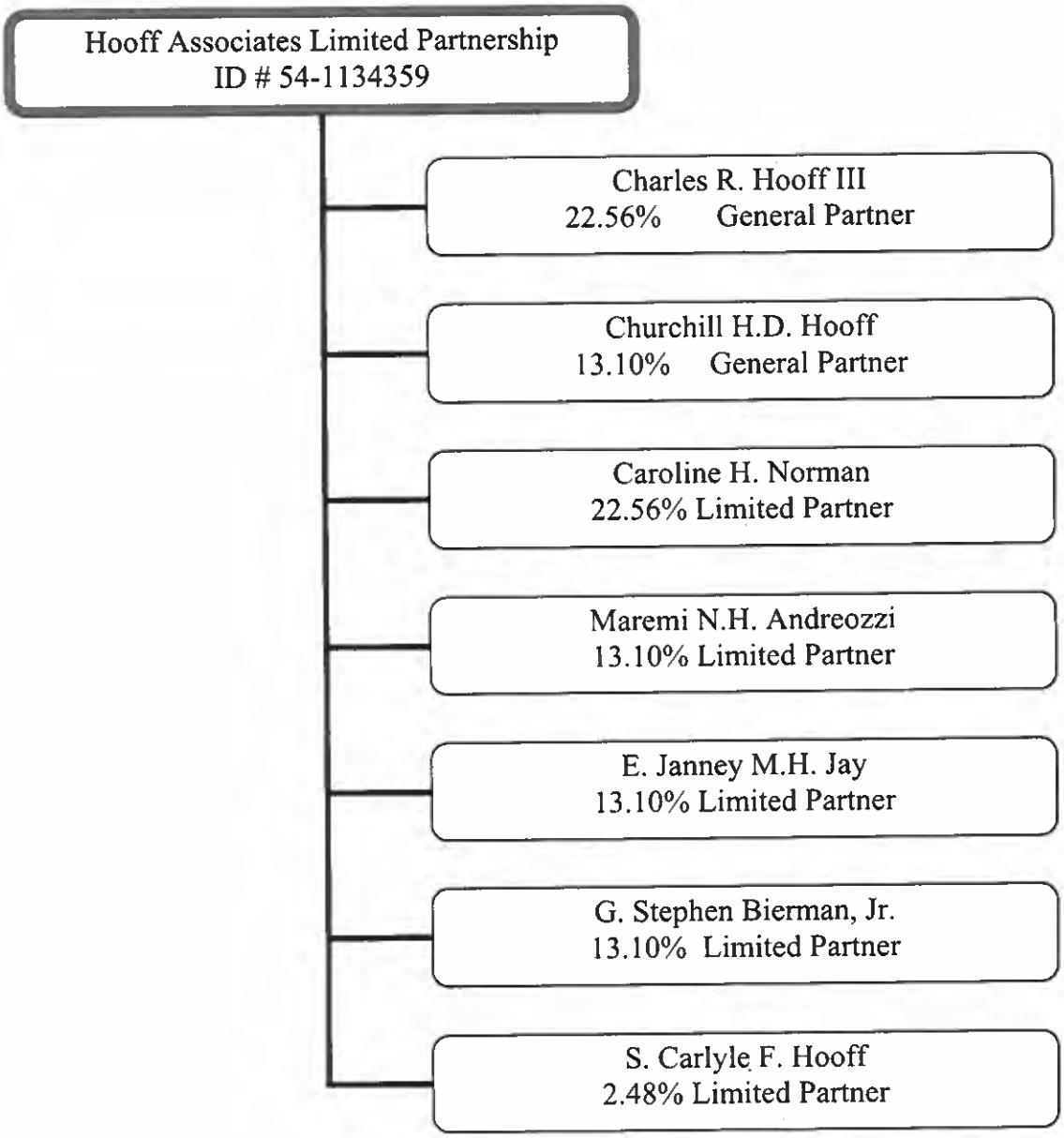

10/3/2012 15:36:09
S:\HooffAssoc\partnership organization.doc

Edited by Foxit PDF Editor
Copyright (c) by Foxit Software Company, 2003 - 2009
For Evaluation Only.

NOTES : 1. FENCES ARE STOCKADE UNLESS NOTED.
2. AREA 2,042 S.F.

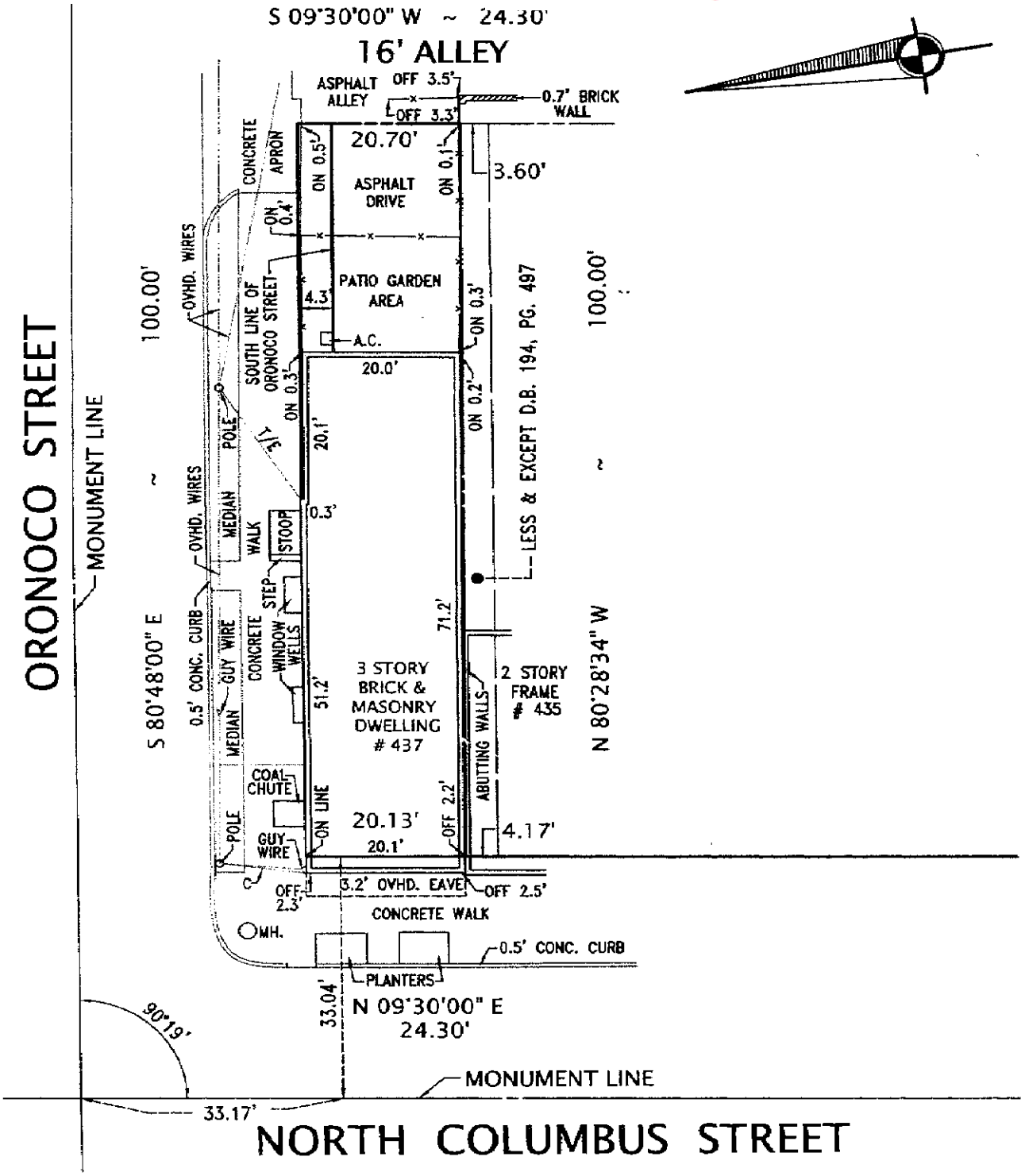

PLAT

SHOWING HOUSE LOCATION ON
THE PROPERTY LOCATED AT

437 NORTH COLUMBUS STREET

CITY OF ALEXANDRIA , VIRGINIA

SCALE: 1" = 20' MAY 14, 2003

GRAPHIC SCALE
0 20 40

COPYRIGHT BY ALEXANDRIA SURVEYS INTERNATIONAL, LLC THE INFORMATION CONTAINED ON THIS DOCUMENT MAY NOT BE COPIED, REPRODUCED OR ALTERED IN ANY FORM WITHOUT PERMISSION IN WRITING FROM THE COPYRIGHT OWNER

EXISTING WEST ELEVATION

EXISTING SOUTH ELEVATION

SCALE: 1/8" - 1'-0"

0' 4' 8' 16'

718 ORONOCO STREET
437 N COLUMBUS STREET, ALEXANDRIA, VA 22314

OPX PROJECT NO. 3587

EXISTING EXTERIOR ELEVATIONS
08/06/2020

PROPOSED WEST ELEVATION

PROPOSED SOUTH ELEVATION

SCALE: 1/8" - 1'-0"

0' 4' 8' 16'

718 ORONOCO STREET
437 N COLUMBUS STREET, ALEXANDRIA, VA 22314

OPX PROJECT NO. 3587

PROPOSED EXTERIOR ELEVATIONS
08/06/2020

STRUCTURAL NOTES

CONSTRUCTION SHALL COMPLY WITH, AND DESIGN HAS BEEN PERFORMED IN ACCORDANCE WITH, THE NOTES BELOW. IF THERE ARE ANY PERCEIVED CONFLICTS BETWEEN THE NOTES OR THE DRAWINGS, THE CONTRACTOR SHALL SUBMIT A WRITTEN REQUEST FOR CLARIFICATION TO THE STRUCTURAL ENGINEER.

A. CODES, STANDARDS, AND REFERENCES

1. BUILDING CODE: VIRGINIA UNIFORM STATEWIDE BUILDING CODE (USBC)-2015; INTERNATIONAL BUILDING CODE (IBC)-2015; INTERNATIONAL RESIDENTIAL BUILDING CODE (IRC)-2009; ASCE 7-10.
2. STEEL CODES: SPECIFICATION FOR STRUCTURAL STEEL BUILDINGS (ANSI/AISC 360-10). STRUCTURAL WELDING CODE - STEEL (AWS D1.1-2010).
3. MASONRY CODE: BUILDING CODE REQUIREMENTS AND SPECIFICATIONS FOR MASONRY STRUCTURES (ACI 530/530.1-13).
4. TIMBER CODES: NATIONAL DESIGN SPECIFICATION FOR WOOD CONSTRUCTION (ANSI/AWC NDS-2015).

B. OCCUPANCY

1. RISK CATEGORY: II.

C. LIVE LOADS

1. BALCONY: 60 PSF.
2. BALCONY ROOF: 20 PSF.

D. SNOW LOADS

1. GROUND SNOW LOAD (P_g): 25 PSF.
2. FLAT ROOF SNOW LOAD (P_f): 20 PSF.
3. SLOPED ROOF SNOW LOAD (P_s): 20 PSF.
4. SNOW IMPORTANCE FACTOR (I_S): 1.0.
5. SNOW EXPOSURE FACTOR (C_e): 0.9.
6. SNOW LOAD THERMAL FACTOR (C_T): 1.2.

E. WIND LOADS

1. BASIC WIND SPEED:
   a. ULTIMATE DESIGN WIND SPEED, Vult, (3-SECOND GUST): 115 MPH.
   b. NOMINAL DESIGN WIND SPEED, Vasd: 90 MPH.
2. WIND EXPOSURE CATEGORY: B.

F. SEISMIC CRITERIA

1. SITE CLASS IS: D (ASSUMED).
2. SEISMIC IMPORTANCE FACTOR (I_E): 1.0.
3. MAPPED SPECTRAL RESPONSE ACCELERATION AT SHORT PERIODS (S_S): 0.118.
4. MAPPED SPECTRAL RESPONSE ACCELERATION AT 1-SECOND PERIOD (S_1): 0.051.
5. DESIGN SPECTRAL ACCELERATION PARAMETER AT SHORT PERIODS (S_{DS}): 0.126.
6. DESIGN SPECTRAL ACCELERATION PARAMETER AT 1-SECOND PERIOD (S_{D1}): 0.082.
7. SEISMIC DESIGN CATEGORY: B.
8. BASIC SEISMIC FORCE RESISTING SYSTEM IS ORDINARY STEEL MOMENT FRAMES.
9. SYSTEM OVERSTRENGTH FACTOR (Ω_0): 3.
10. DEFLECTION AMPLIFICATION FACTOR (C_d): 3.
11. RESPONSE MODIFICATION COEFFICIENT (R): 3.5.
12. ANALYSIS PROCEDURE: EQUIVALENT LATERAL FORCE PROCEDURE.
13. DESIGN BASE SHEAR: 0.5 KIPS.

G. MATERIALS AND PHYSICAL PROPERTIES

1. "(___)" INDICATES ASTM STANDARD FOR WHICH MATERIAL SHALL CONFORM.
2. NON-SHRINK GROUT (C1107)..... f'c=3,000 psi
3. STRUCTURAL STEEL
   a. W-SHAPES (A992).....Fy=50,000 psi
   b. CHANNELS, ANGLES, & PLATES (A36).....Fy=36,000 psi
4. WELDING ELECTRODES: PER TABLE 3.1 OF AWS D1.1 FOR THE SMAW PROCESS OR ANY OTHER PREQUALIFIED WELDING PROCEDURES SPECIFICATIONS (WPS).
5. STEEL BOLTS AND THREADED RODS
   a. HIGH STRENGTH BOLTS (F3125, GRADE A325, TYPE 1).....Fu=120,000 psi
   b. THREADED STEEL RODS (A572, GRADE 50)..... Fy=50,000 psi, Fu=65,000 psi
   c. ANCHOR RODS (F1554, GRADE 55, S1).....Fy=55,000 psi, Fu=75,000 psi
   d. ALL STEEL BOLTS AND THREADED RODS, AS NOTED, SHALL BE HOT-DIP GALVANIZED PER ASTM A153.
6. WOOD FRAMING (SOUTHERN PINE, NO. 2)..... Fb=750 psi
   E=1,300,000 psi
7. WOOD SHEATHING ..... 1/2" THICK, TONGUE & GROOVE EDGES, EXTERIOR GRADE, SPAN RATING 16"

H. ANCHORS

1. PROPOSED ANCHORS SHALL BE SUBMITTED TO THE STRUCTURAL ENGINEER FOR REVIEW AND APPROVAL PRIOR TO FIELD OPERATIONS.
2. ALL ANCHORS SHALL BE INSTALLED IN ACCORDANCE WITH THE RECOMMENDATIONS OF THE MANUFACTURER.
3. MASONRY ADHESIVE ANCHORS:
   a. SHALL BE HILTI HIT-HY 270 MANUFACTURED BY HILTI FASTENING SYSTEMS OR AN APPROVED EQUIVALENT WITH ACCOMPANYING ICC EVALUATION REPORT;
   b. SHALL USE INJECTABLE ADHESIVE;
   c. RODS SHALL BE MANUFACTURED WITH CHAMFERED ENDS (EACH END) AND MEET ONE OF THE FOLLOWING STANDARDS:
   i. ASTM A3;
   ii. ISO 898 CLASS 5.8;
4. IF MINIMUM REQUIREMENTS (EMBEDMENT, SPACING, AND EDGE DISTANCE) FOR ANCHORS CANNOT BE ACHIEVED DUE TO FIELD CONDITIONS, NOTIFY THE STRUCTURAL ENGINEER FOR GUIDANCE PRIOR TO DRILLING HOLES FOR ANCHORS.
5. HOLES FOR ANCHORS TO BE INSTALLED IN MASONRY SHALL BE DRILLED WITH A ROTARY DRILL ONLY, NOT A ROTARY-HAMMER DRILL.
6. A FIELD TECHNICIAN EMPLOYED BY THE ANCHOR MANUFACTURER SHALL BE ON SITE DURING ALL DRILLING AND INSTALLATION PROCESSES FOR EACH TYPE OF ANCHOR INSTALLED.
7. CURING TIME FOR ADHESIVE AND EPOXY ADHESIVE ANCHOR SYSTEM SHALL BE A MINIMUM OF 48 HOURS OR AS RECOMMENDED BY THE ANCHOR MANUFACTURER, WHICHEVER IS MORE STRINGENT.
8. PROVIDE SPECIAL INSPECTION FOR ALL MECHANICAL AND ADHESIVE ANCHORS PER THE APPLICABLE BUILDING CODE AND PER THE CURRENT ICC-ES REPORT (IBC 2012 TABLE 1705.3 NOTE B).

J. STRUCTURAL STEEL

1. SEE STRUCTURAL NOTES SECTION "MATERIALS AND PHYSICAL PROPERTIES" FOR THE STRENGTHS OF STRUCTURAL STEEL, BOLTS, THREADED RODS, ANCHOR RODS, AND WELDS.
2. BEAMS MARKED ON THE DRAWINGS WITH "▶" SYMBOL SHALL HAVE MOMENT CONNECTIONS. SEE CONNECTION DETAILS ON SHEETS S-502 AND S-503.
3. UNLESS NOTED OTHERWISE, HIGH STRENGTH BOLTS SHALL BE TIGHTENED TO A SNUG TIGHT CONDITION AS DEFINED BY THE RCSC "SPECIFICATION FOR STRUCTURAL JOINTS USING HIGH-STRENGTH BOLTS" (2009 EDITION).
4. WELDS SHALL BE INSTALLED BY WELDERS QUALIFIED IN ACCORDANCE WITH AWS PROCEDURES FOR WELDER QUALIFICATION.
5. UNLESS NOTED OTHERWISE, ALL STRUCTURAL STEEL MEMBERS SHALL HAVE APPLIED ONE SHOP COAT OF A TWO-COMPONENT EPOXY ANTI-CORROSIVE PRIMER PIGMENTED WITH ZINC, TWO MILS DRY FILM THICKNESS, AND ONE COAT OF A TWO-COMPONENT ACRYLIC POLYURETHANE FINISH COAT, TWO MILS DRY FILM THICKNESS.
6. WELDING INSPECTION SHALL BE MADE IN ACCORDANCE WITH THE INSPECTION CHAPTER OF AWS D1.1 (2010).

K. TIMBER

1. SEE STRUCTURAL NOTES SECTION "MATERIALS AND PHYSICAL PROPERTIES" FOR STRENGTH AND PROPERTIES OF TIMBER.
2. PROVIDE SIMPSON FACE MOUNT HANGERS SPECIFIED IN DRAWING DETAILS, OR APPROVED EQUIVALENT, AT EACH FLOOR OR ROOF JOIST FRAMING INTO WOOD BLOCKING IN STEEL MEMBER WEB.
3. MINIMUM HANGER CAPACITIES FOR EACH JOIST EACH SIZE ARE:
   a. 2x8: 500 LB (DOWNWARD); 350 LB (UPLIFT).
   b. 2x10: 700 LB (DOWNWARD); 350 LB (UPLIFT).

L. FINISHES

1. CONTRACTOR TO PROVIDE MEMBRANE FINISH AT SECOND AND THIRD FLOORS.
2. CONTRACTOR TO PROVIDE ROLLED ROOFING FINISH TO MATCH EXISTING.
3. CONTRACTOR TO PROVIDE CLADDING AROUND COLUMNS, PERIMETER BEAMS, AND PERIMETER JOISTS AT THE SECOND FLOOR, THIRD FLOOR, AND ROOF LEVELS PER DETAILS ON SHEETS A-501 AND A-502.
4. CONTRACTOR TOP PROVIDE FLASHING AND WATERPROOFING AT CLADDING JOINTS AND TRANSITIONS BETWEEN CLADDING AND EXISTING MASONRY PER DETAILS ON SHEETS A-501 AND A-502.

M. GENERAL CONTRACTOR

1. SHOP DRAWINGS FOR ALL STRUCTURAL ITEMS ARE PART OF THE STRUCTURAL DESIGN AND SHALL BE SUBMITTED TO THE STRUCTURAL ENGINEER FOR REVIEW AND APPROVAL PRIOR TO FABRICATION AND CONSTRUCTION.
2. ALL STRUCTURAL ELEMENTS SHALL BE TEMPORARILY SHORED AND BRACED AS REQUIRED TO RESIST THE LOADS TO WHICH THEY MAY BE SUBJECT DURING CONSTRUCTION.
3. ALL TEMPORARY SHORING AND BRACING SHALL BE DESIGNED BY A REGISTERED PROFESSIONAL ENGINEER RETAINED BY THE CONTRACTOR AND SHALL REMAIN IN-PLACE UNTIL THE STRUCTURE IS CAPABLE OF SUPPORTING THE LOADS TO WHICH IT MAY BE SUBJECT. DETERMINATION OF WHEN TEMPORARY SHORING AND BRACING CAN BE REMOVED IS THE RESPONSIBILITY OF THE SHORING ENGINEER.
4. IMPOSED CONSTRUCTION LOADS, IN EXCESS OF THE STATED DESIGN LOADS MUST BE APPROVED BY THE STRUCTURAL ENGINEER PRIOR TO THE IMPOSITION OF SUCH LOADS.

N. EXISTING STRUCTURE

1. INFORMATION SHOWN ON THE STRUCTURAL DRAWINGS REGARDING THE EXISTING STRUCTURE HAS BEEN OBTAINED FROM FIELD OBSERVATIONS.
2. DIMENSIONS OF EXISTING CONSTRUCTION SHOWN ON THE STRUCTURAL DRAWINGS ARE APPROXIMATE AND SHALL BE FIELD VERIFIED BY THE CONTRACTOR PRIOR TO BEGINNING CONSTRUCTION.
3. IF DEVIATIONS ARE FOUND BETWEEN THE EXISTING INFORMATION SHOWN ON THE STRUCTURAL DRAWINGS AND ACTUAL CONDITIONS WHICH WILL NOT PERMIT NEW STRUCTURAL WORK TO BE PERFORMED AS SPECIFIED, THE STRUCTURAL ENGINEER SHALL BE NOTIFIED IN WRITING FOR GUIDANCE PRIOR TO THE START OF THE WORK IN QUESTION.
4. CONTRACTOR SHALL SUBMIT METHODS AND SEQUENCING FOR THE REMOVAL OF THE EXISTING STRUCTURE, AS WELL AS TYPES OF TOOLS AND EQUIPMENT TO BE USED, TO THE STRUCTURAL ENGINEER FOR REVIEW AND APPROVAL PRIOR TO COMMENCING ANY DEMOLITION OR ALTERATIONS. EXTREME CARE SHALL BE TAKEN TO PROTECT THE INTEGRITY OF ADJACENT EXISTING STRUCTURE AT ALL TIMES. THE CONTRACTOR SHALL BEAR THE COST OF REPAIRS OR REPLACEMENT FOR DAMAGE TO ANY PART OF EXISTING STRUCTURES OR ADJOINING PROPERTY.

LEGEND

CONCRETE	STEEL	CMU
GROUT	GRAVEL	SOLID CMU
EARTH	BRICK	EXISTING
STONE	FOAM	

LIST OF ABBREVIATIONS

&	AND
@	AT
Ø	DIAMETER
(E), EXIST	EXISTING
(H)	HIGH
(L)	LOW
#, NO.	NUMBER
%	PERCENT
ABV	ABOVE
ADDL	ADDITIONAL
AF&PA	AMERICAN FOREST & PAPER ASSOCIATION
AISC	AMERICAN INSTITUTE OF STEEL CONSTRUCTION
AISI	AMERICAN IRON AND STEEL INSTITUTE
ANSI	AMERICAN NATIONAL STANDARDS INSTITUTE
APPROX	APPROXIMATE
ASCE	AMERICAN SOCIETY OF CIVIL ENGINEERS
ASTM	AMERICAN SOCIETY FOR TESTING AND MATERIALS
AWC	AMERICAN WOOD COUNCIL
AWS	AMERICAN WELDING SOCIETY
BLDG	BUILDING
B.O.	BOTTOM OF
BRG	BEARING
CL	CENTERLINE
CLR	CLEAR
CMU	CONCRETE MASONRY UNIT
COL	COLUMN
CONT	CONTINUOUS
COORD	COORDINATE
DEMO	DEMOLISH, DEMOLITION
DIM(S)	DIMENSION(S)
DL	DEAD LOAD
DWG(S)	DRAWING(S)
EL, ELEV	ELEVATION
EMBED	EMBEDMENT
EQ	EQUAL
EXT	EXTERIOR
FT	FOOT OR FEET
HORIZ	HORIZONTAL
IBC	INTERNATIONAL BUILDING CODE
ICC	INTERNATIONAL CODE COUNCIL
I.D.	INSIDE DIAMETER
IN	INCH
INT	INTERIOR
ISO	INTERNATIONAL STANDARDIZATION ORGANIZATION
JT	JOINT
K	KIP(S)
KSF	KIPS PER SQUARE FOOT
KSI	KIPS PER SQUARE INCH
LB, #	POUNDS
LL	LIVE LOAD
MAS	MASONRY
MAX	MAXIMUM
MTL	METAL
MFR	MANUFACTURER
MIN	MINIMUM
MISC	MISCELLANEOUS
MPH	MILES PER HOUR
NDS	NATIONAL DESIGN SPECIFICATION FOR WOOD CONSTRUCTION
NIC	NOT IN CONTRACT
NOM	NOMINAL
NTS	NOT TO SCALE
O.C.	ON CENTER
OPP	OPPOSITE
PL	PLATE
PREFAB	PREFABRICATED
PSF	POUNDS PER SQUARE FOOT
PSI	POUNDS PER SQUARE INCH
REQD	REQUIRED
S.F.	SQUARE FEET
SIM	SIMILAR
SPA	SPACES (SPACING)
SPECS	SPECIFICATIONS
STD	STANDARD
T&B	TOP AND BOTTOM
TEMP	TEMPORARY
T&G	TONGUE AND GROOVE
THRU	THROUGH
T.O.	TOP OF
TYP	TYPICAL
U.N.O.	UNLESS NOTED OTHERWISE
VERT	VERTICAL
WL	WIND LOAD
W/	WITH
W/O	WITHOUT

WOODS · PEACOCK
ENGINEERING CONSULTANTS
5285 Shawnee Rd. Suite 100, Alexandria, VA 22312
MAIN 703/658-4400 WEB www.woodspeacock.com

PROJECT NO. 19-087-00

PRE-FINAL
REVIEW SET
NOT FOR
CONSTRUCTION

718 ORONOCO ST.
BALCONY
REPLACEMENT

718 ORONOCO STREET
ALEXANDRIA, VA 22314

Rev.	Date	Description	Approved

Sheet Title

STRUCTURAL NOTES

Drawn: CAD	Approv: TMP
Scale: AS NOTED	Date: 2020-05-22

Sheet No.

S-001

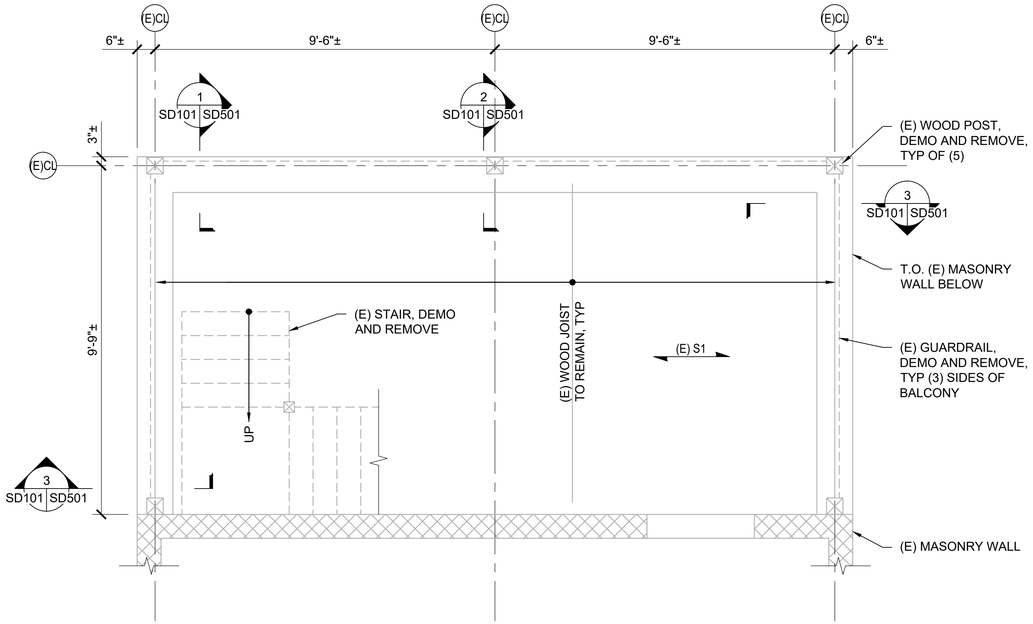

NOTES:
1. (E) S1 = EXISTING WOOD SHEATHING, DEMO AND REMOVE.

1 BALCONY SECOND FLOOR DEMOLITION PLAN

SD101 SD101 SCALE: 1/2" = 1'-0"

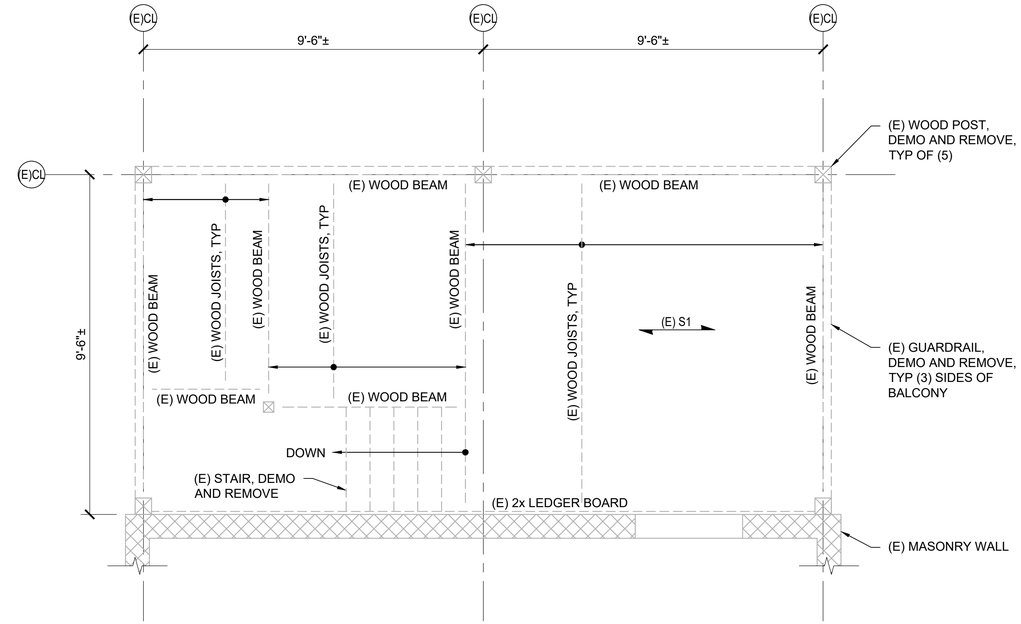

NOTES:
1. DEMO AND REMOVE ALL EXISTING WOOD FRAMING SHOWN IN PLAN.
2. (E) S1 = EXISTING WOOD SHEATHING, DEMO AND REMOVE.

2 BALCONY THIRD FLOOR DEMOLITION PLAN

SD101 SD101 SCALE: 1/2" = 1'-0"

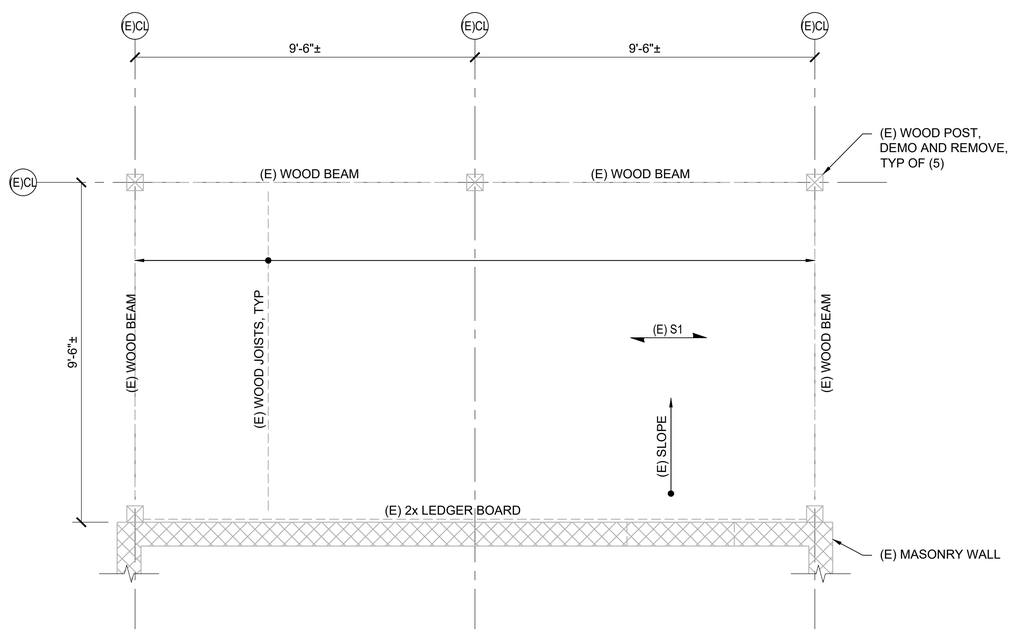

NOTES:
1. DEMO AND REMOVE ALL EXISTING WOOD FRAMING SHOWN IN PLAN.
2. (E) S1 = EXISTING WOOD SHEATHING, DEMO AND REMOVE.

3 BALCONY ROOF DEMOLITION PLAN

SD101 SD101 SCALE: 1/2" = 1'-0"

0 1' 2' 4'
1/2" = 1'-0"

WOODS · PEACOCK
ENGINEERING CONSULTANTS
5285 Shawnee Rd. Suite 100, Alexandria, VA 22312
MAIN 703/658-4400 WEB www.woodspeacock.com

PROJECT NO. 19-087-00

PRE-FINAL
REVIEW SET
NOT FOR
CONSTRUCTION

718 ORONOCO ST.
BALCONY
REPLACEMENT

718 ORONOCO STREET
ALEXANDRIA, VA 22314

Rev.	Date	Description	Approved

Sheet Title

STRUCTURAL
DEMOLITION PLANS

Drawn:	CAD	Approv:	TMP
Scale:	AS NOTED	Date:	2020-05-22

Sheet No.

SD101

2 of 9

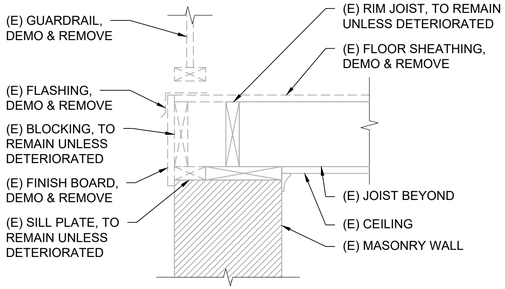

1 SD101 SD501 EAST WALL SECOND FLOOR DEMO DETAIL

SCALE: 1-1/2" = 1'-0"

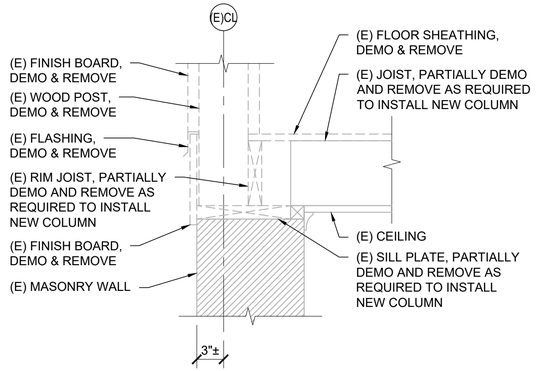

2 SD101 SD501 EAST WALL AT COLUMN SECOND FLOOR DEMO DETAIL

SCALE: 1-1/2" = 1'-0"

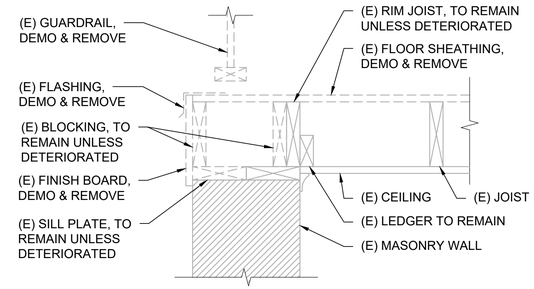

3 SD101 SD501 NORTH AND SOUTH WALLS SECOND FLOOR DEMO DETAIL

SCALE: 1-1/2" = 1'-0"

0 1/2' 1' 1 1/2'

1-1/2" = 1'-0"

WOODS · PEACOCK

ENGINEERING CONSULTANTS

5285 Shawnee Rd. Suite 100, Alexandria, VA 22312

MAIN 703/658-4400 WEB www.woodspeacock.com

PROJECT NO. 19-087-00

PRE-FINAL REVIEW SET NOT FOR CONSTRUCTION

718 ORONOCO ST. BALCONY REPLACEMENT

718 ORONOCO STREET
ALEXANDRIA, VA 22314

Rev.	Date	Description	Approved

Sheet Title

STRUCTURAL DEMOLITION SECTIONS AND DETAILS

Drawn: CAD	Approv: TMP
Scale: AS NOTED	Date: 2020-05-22

Sheet No.

SD501

3 of 9

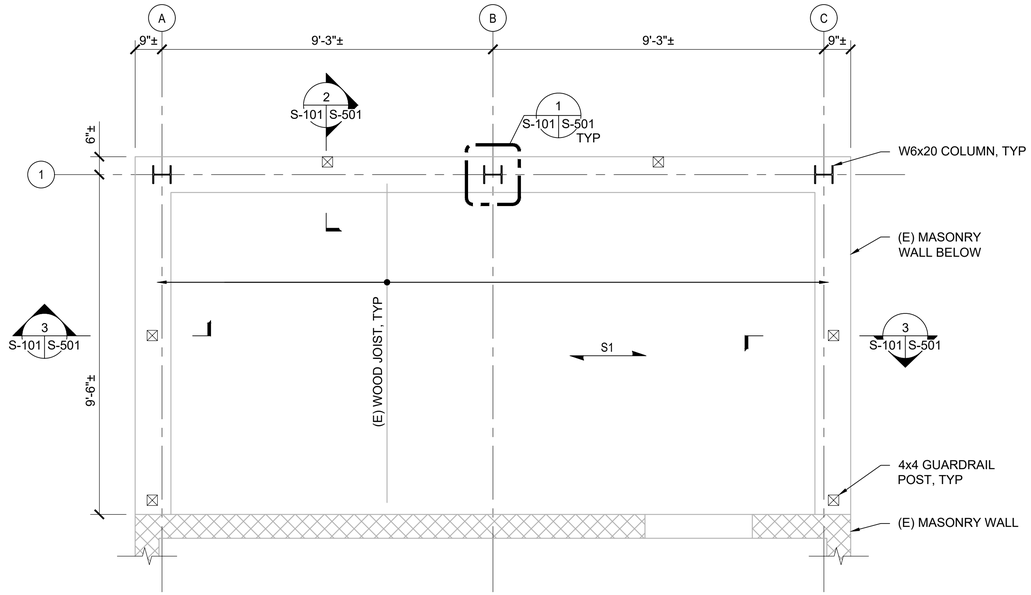

1 S-101 S-101 BALCONY SECOND FLOOR FRAMING PLAN

SCALE: 1/2" = 1'-0"

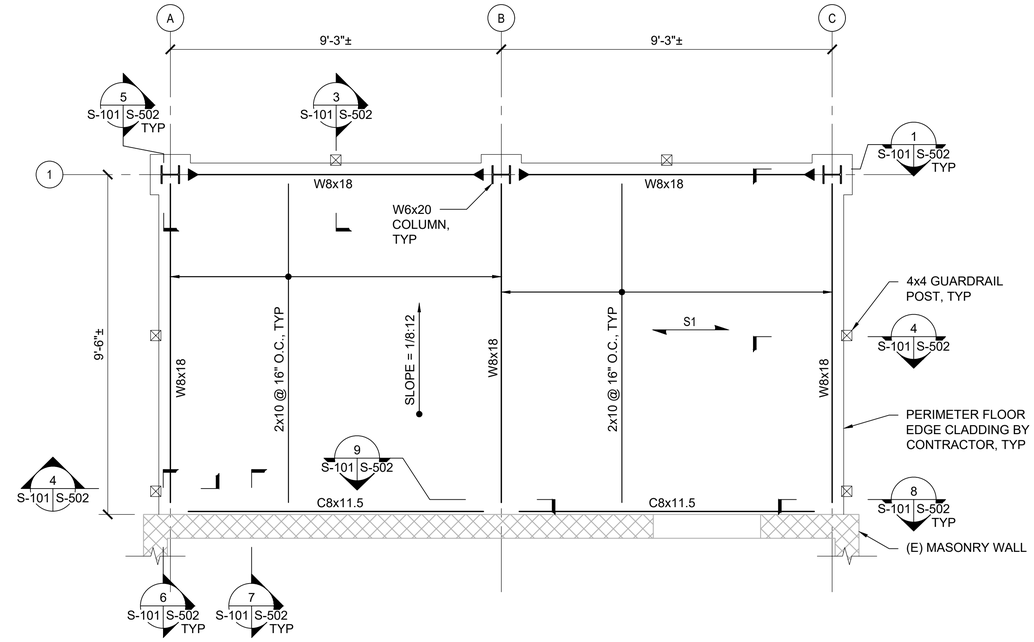

2 S-101 S-101 BALCONY THIRD FLOOR FRAMING PLAN

SCALE: 1/2" = 1'-0"

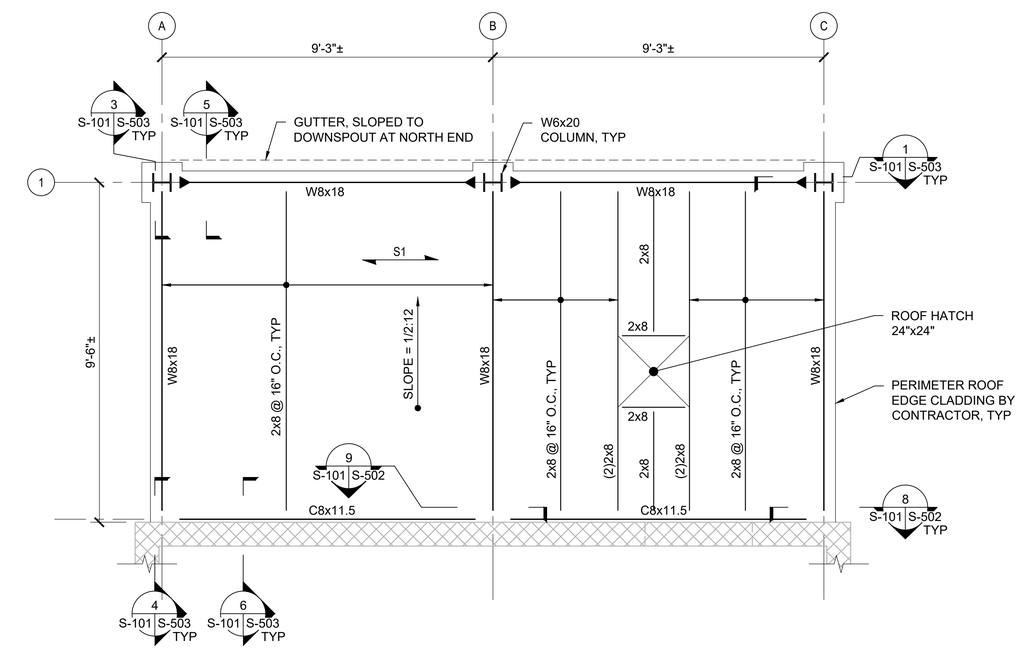

3 S-101 S-101 BALCONY ROOF FRAMING PLAN

SCALE: 1/2" = 1'-0"

SHEET NOTES:

1. S1 = PLYWOOD SHEATHING PER STRUCTURAL NOTES.
2. CONTRACTOR MUST FIELD VERIFY ELEVATION OF EXISTING FINISHED THIRD FLOOR AND SET TOP OF STEEL ELEVATIONS TO ENSURE NEW FINISHED FLOOR ELEVATION MATCHES EXISTING FINISHED FLOOR ELEVATION AT FACE OF EXISTING MASONRY WALL.
3. CONTRACTOR MUST FIELD VERIFY ELEVATION OF EXISTING ROOF AT FACE OF EXISTING MASONRY WALL AND SET TOP OF STEEL ELEVATIONS TO ENSURE EXISTING ROOF TRANSITIONS EVENLY INTO NEW ROOF FRAMING.

0 1' 2' 4'
1/2" = 1'-0"

WOODS · PEACOCK
ENGINEERING CONSULTANTS
5285 Shawnee Rd. Suite 100, Alexandria, VA 22312
MAIN 703/658-4400 WEB www.woodspeacock.com

PROJECT NO. 19-087-00

PRE-FINAL
REVIEW SET
NOT FOR
CONSTRUCTION

718 ORONOCO ST.
BALCONY
REPLACEMENT

718 ORONOCO STREET
ALEXANDRIA, VA 22314

Rev.	Date	Description	Approved

Sheet Title

STRUCTURAL
FRAMING PLANS

Drawn:	CAD	Approv:	TMP
Scale:	AS NOTED	Date:	2020-05-22

Sheet No.

S-101

4 of 9

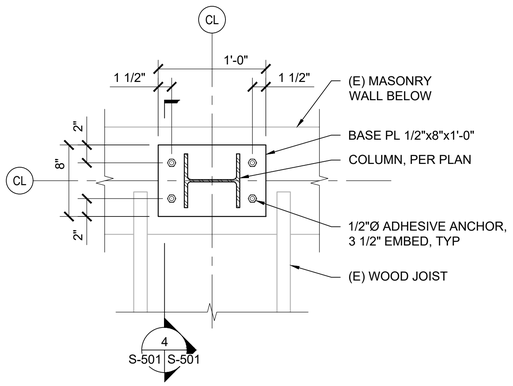

1 S-101 S-501 BASE PLATE PLAN DETAIL

SCALE: 1-1/2" = 1'-0"

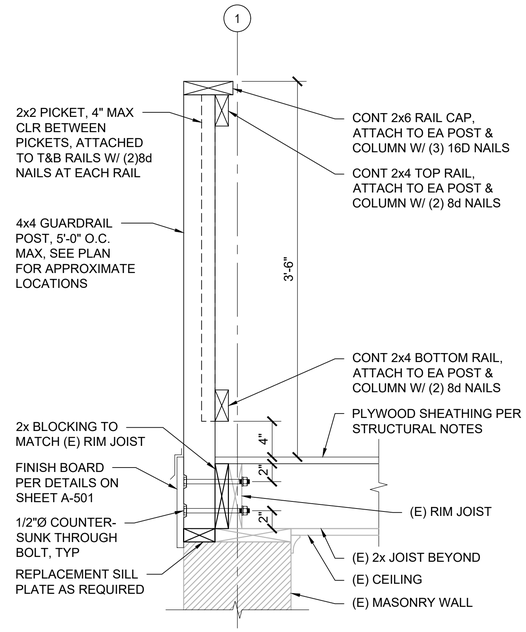

2 S-101 S-501 SECOND FLOOR GUARDRAIL DETAIL

SCALE: 1-1/2" = 1'-0"

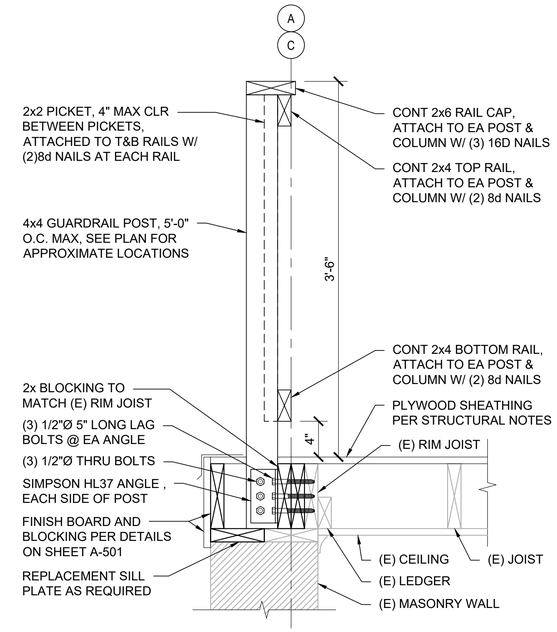

3 S-101 S-501 SECOND FLOOR GUARDRAIL DETAIL

SCALE: 1-1/2" = 1'-0"

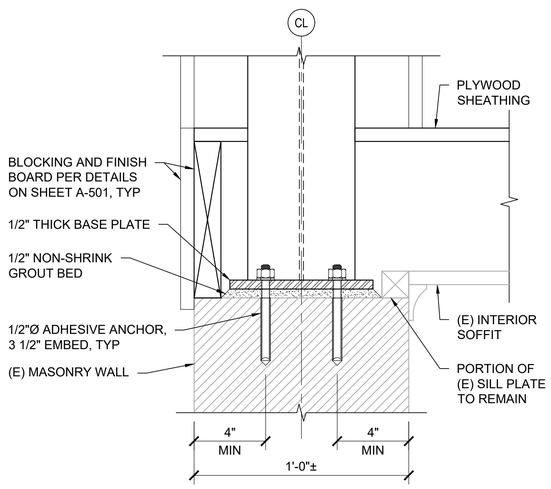

4 S-501 S-501 BASE PLATE SECTION

SCALE: 3" = 1'-0"

0 1/2' 1' 1 1/2'
1-1/2" = 1'-0"

0 3" 6" 9"
3" = 1'-0"

WOODS • PEACOCK
ENGINEERING CONSULTANTS
5285 Shawnee Rd. Suite 100, Alexandria, VA 22312
MAIN 703/658-4400 WEB www.woodspeacock.com

PROJECT NO. 19-087-00

PRE-FINAL REVIEW SET NOT FOR CONSTRUCTION

718 ORONOCO ST. BALCONY REPLACEMENT

718 ORONOCO STREET
ALEXANDRIA, VA 22314

Rev.	Date	Description	Approved

Sheet Title
STRUCTURAL SECTIONS AND DETAILS SECOND FLOOR

Drawn:	CAD	Approv:	TMP
Scale:	AS NOTED	Date:	2020-05-22

Sheet No.
S-501
5 of 9

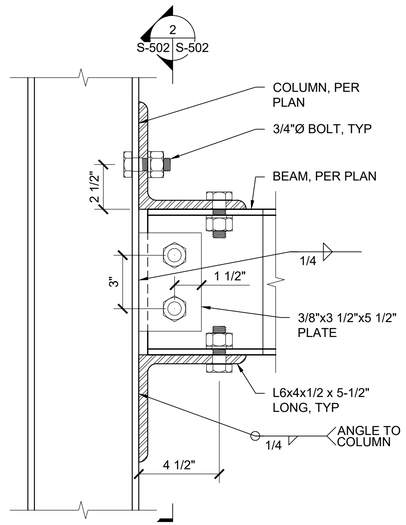

BEAM TO COLUMN MOMENT CONNECTION

1 S-101 S-502 SCALE: 3" = 1'-0"

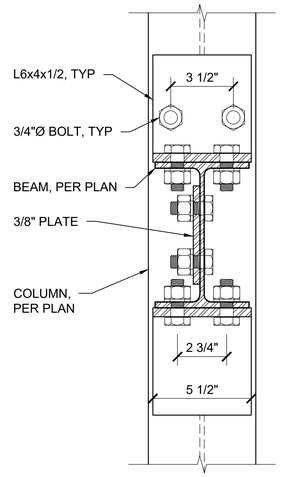

BEAM TO COLUMN MOMENT CONNECTION

2 S-502 S-502 SCALE: 3" = 1'-0"

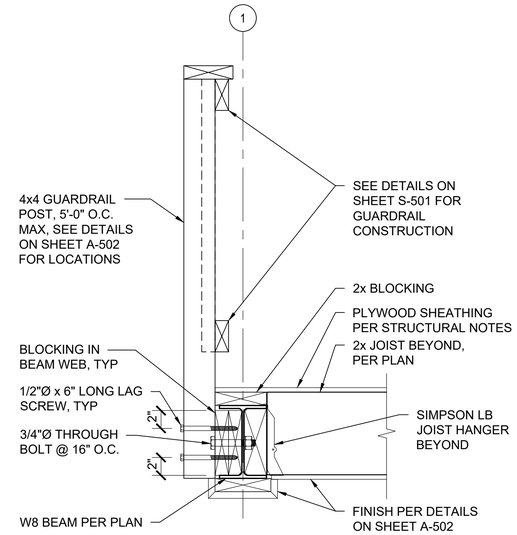

THIRD FLOOR GUARDRAIL AND JOIST CONNECTION DETAIL

3 S-101 S-502 SCALE: 1-1/2" = 1'-0"

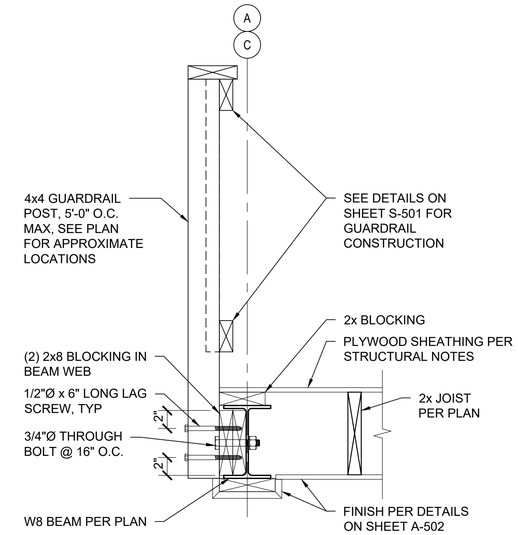

THIRD FLOOR GUARDRAIL DETAIL

4 S-101 S-502 SCALE: 1-1/2" = 1'-0"

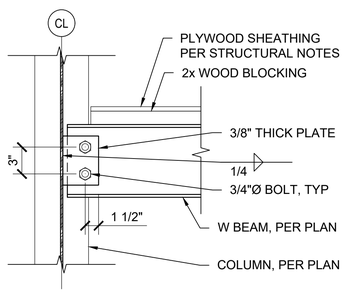

THIRD FLOOR BEAM TO - COLUMN CONNECTION DETAIL

5 S-101 S-502 SCALE: 1-1/2" = 1'-0"

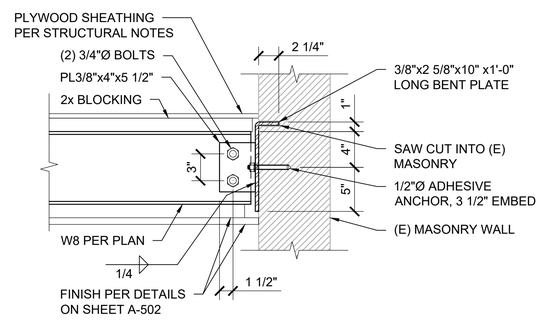

THIRD FLOOR BEAM CONNECTION DETAIL

6 S-101 S-502 SCALE: 1-1/2" = 1'-0"

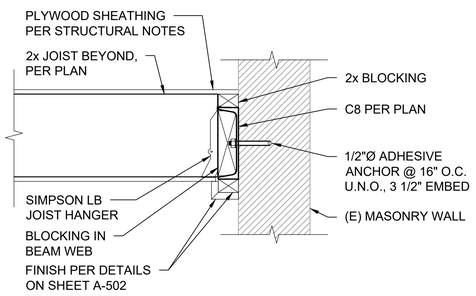

THIRD FLOOR JOIST CONNECTION DETAIL

7 S-101 S-502 SCALE: 1-1/2" = 1'-0"

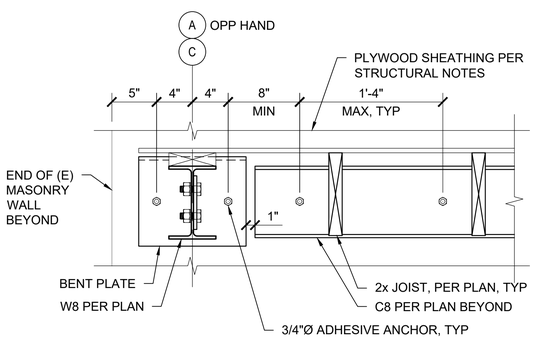

CHANNEL TO (E) MASONRY WALL CONNECTION

8 S-101 S-502 SCALE: 1-1/2" = 1'-0"

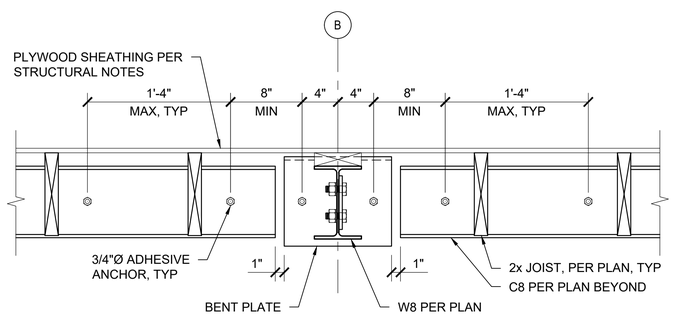

CHANNEL TO (E) MASONRY WALL CONNECTION

9 S-101 S-502 SCALE: 1-1/2" = 1'-0"

0 1/2' 1' 1 1/2'
1-1/2" = 1'-0"

0 3" 6" 9"
3" = 1'-0"

WOODS · PEACOCK
ENGINEERING CONSULTANTS
5285 Shawnee Rd. Suite 100, Alexandria, VA 22312
MAIN 703/658-4400 WEB www.woodspeacock.com

PROJECT NO. 19-087-00

PRE-FINAL REVIEW SET NOT FOR CONSTRUCTION

718 ORONOCO ST. BALCONY REPLACEMENT

718 ORONOCO STREET
ALEXANDRIA, VA 22314

Rev.	Date	Description	Approved

Sheet Title
STRUCTURAL SECTIONS AND DETAILS THIRD FLOOR

Drawn:	CAD	Approv:	TMP
Scale:	AS NOTED	Date:	2020-05-22

Sheet No.
S-502
6 of 9

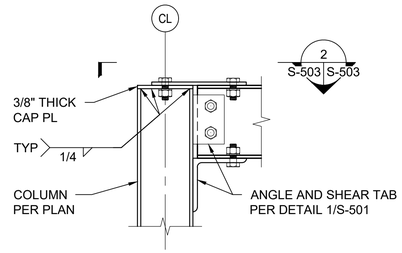

ROOF LEVEL MOMENT CONNECTION

1 S-101 S-503 SCALE: 1-1/2" = 1'-0"

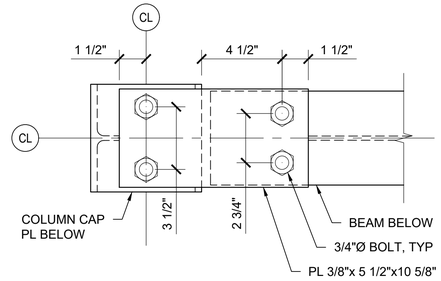

ROOF LEVEL MOMENT CONNECTION

2 S-503 S-503 SCALE: 3" = 1'-0"

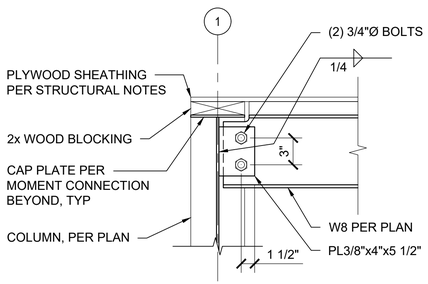

ROOF BEAM TO - COLUMN CONNECTION DETAIL

3 S-101 S-503 SCALE: 1-1/2" = 1'-0"

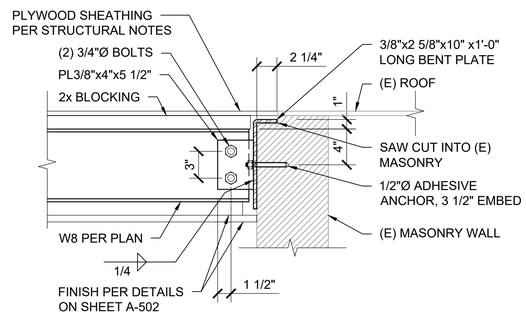

ROOF BEAM CONNECTION DETAIL

4 S-101 S-503 SCALE: 1-1/2" = 1'-0"

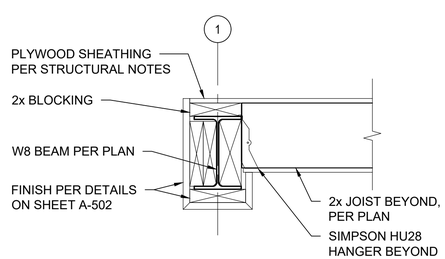

ROOF JOIST CONNECTION DETAIL

5 S-101 S-503 SCALE: 1-1/2" = 1'-0"

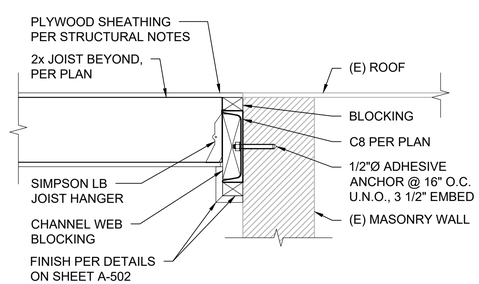

ROOF JOIST CONNECTION DETAIL

6 S-101 S-503 SCALE: 1-1/2" = 1'-0"

0 1/2' 1' 1 1/2'
1-1/2" = 1'-0"

0 3" 6" 9"
3" = 1'-0"

WOODS · PEACOCK
ENGINEERING CONSULTANTS
5285 Shawnee Rd. Suite 100, Alexandria, VA 22312
MAIN 703/658-4400 WEB www.woodspeacock.com

PROJECT NO. 19-087-00

PRE-FINAL
REVIEW SET
NOT FOR
CONSTRUCTION

718 ORONOCO ST.
BALCONY
REPLACEMENT

718 ORONOCO STREET
ALEXANDRIA, VA 22314

Rev.	Date	Description	Approved

Sheet Title
STRUCTURAL
SECTIONS AND DETAILS
ROOF

Drawn: CAD	Approv: TMP
Scale: AS NOTED	Date: 2020-05-22

Sheet No.
S-503
7 of 9

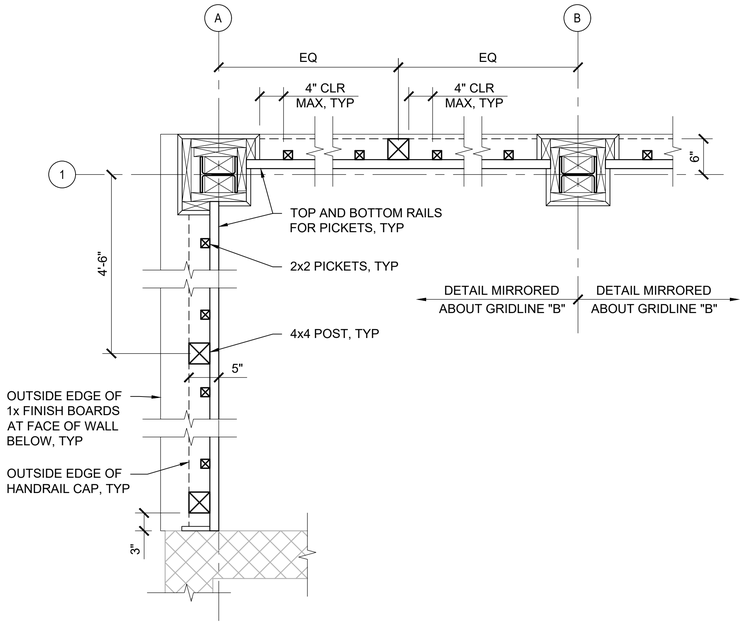

1 A-501 A-501 COLUMN ENCLOSURE PLAN DETAIL - SECOND FLOOR

SCALE: 1" = 1'-0"

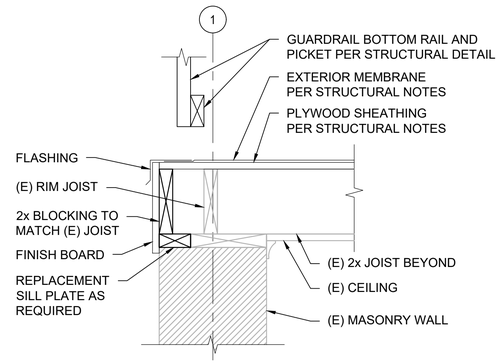

2 A-501 A-501 SECOND FLOOR EDGE DETAIL

SCALE: 1-1/2" = 1'-0"

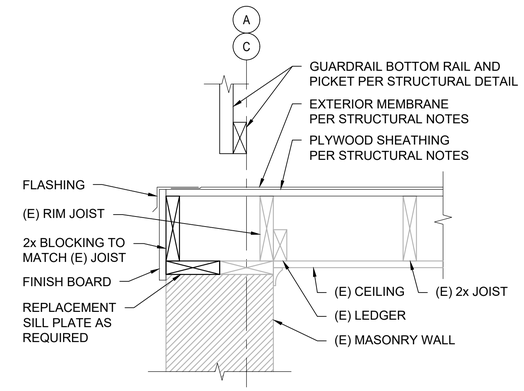

3 A-501 A-501 SECOND FLOOR EDGE DETAIL

SCALE: 1-1/2" = 1'-0"

0 1/2' 1' 2'
1" = 1'-0"

0 1/2' 1' 1 1/2'
1-1/2" = 1'-0"

WOODS · PEACOCK
ENGINEERING CONSULTANTS
5285 Shawnee Rd. Suite 100, Alexandria, VA 22312
MAIN 703/658-4400 WEB www.woodspeacock.com

PROJECT NO. 19-087-00

PRE-FINAL
REVIEW SET
NOT FOR
CONSTRUCTION

718 ORONOCO ST.
BALCONY
REPLACEMENT

718 ORONOCO STREET
ALEXANDRIA, VA 22314

Rev.	Date	Description	Approved

Sheet Title
ARCHITECTURAL
SECTIONS AND DETAILS
SECOND FLOOR

Drawn:	CAD	Approv:	TMP
Scale:	AS NOTED	Date:	2020-05-22

Sheet No.
A-501
8 of 9

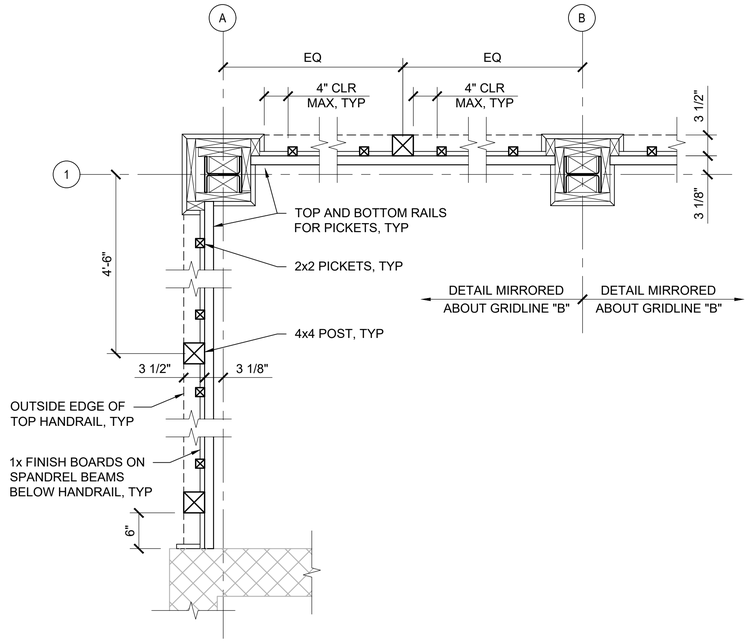

1 A-502 A-502 COLUMN ENCLOSURE PLAN DETAIL - THIRD FLOOR
SCALE: 1" = 1'-0"

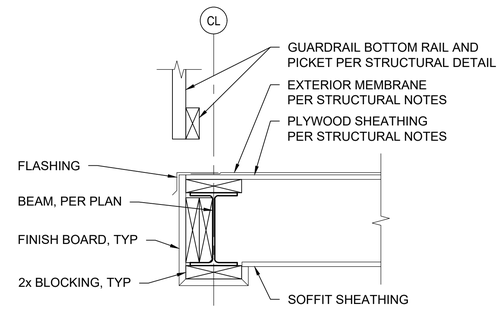

2 A-502 A-502 THIRD FLOOR EDGE DETAIL
SCALE: 1-1/2" = 1'-0"

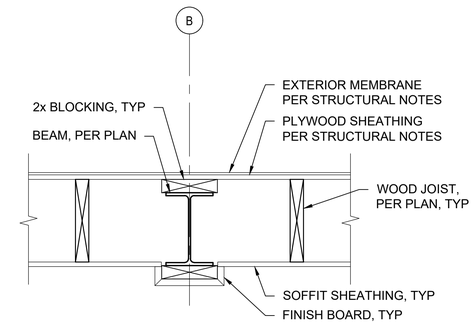

3 A-502 A-502 THIRD FLOOR INTERIOR BEAM DETAIL
SCALE: 1-1/2" = 1'-0"

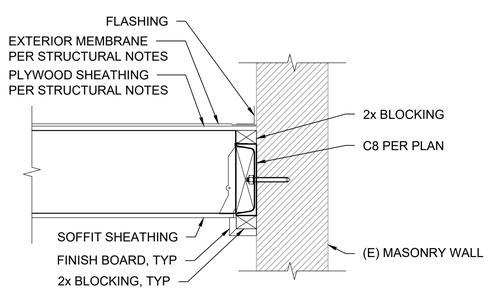

4 A-502 A-502 THIRD FLOOR AT WALL DETAIL
SCALE: 1-1/2" = 1'-0"

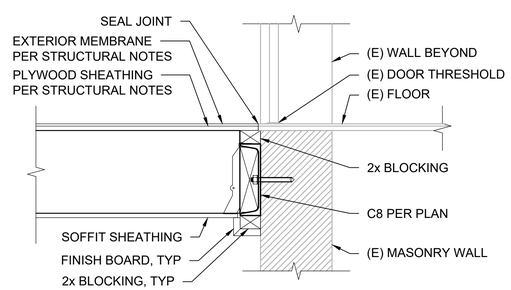

5 A-502 A-502 THIRD FLOOR AT DOOR DETAIL
SCALE: 1-1/2" = 1'-0"

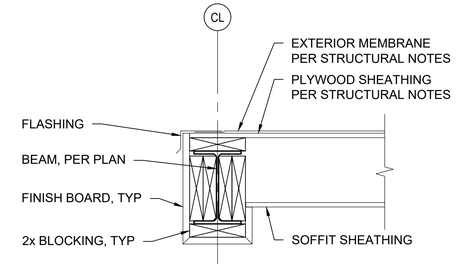

6 A-502 A-502 ROOF EDGE DETAIL
SCALE: 1-1/2" = 1'-0"

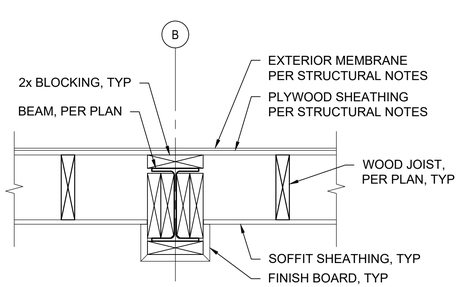

7 A-502 A-502 ROOF INTERIOR BEAM DETAIL
SCALE: 1-1/2" = 1'-0"

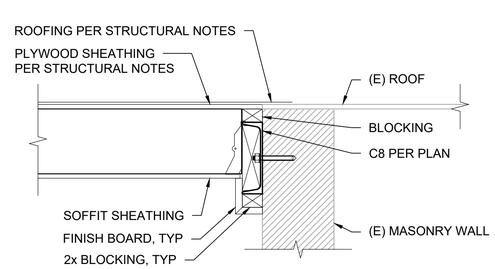

8 A-502 A-502 ROOF AT WALL DETAIL
SCALE: 1-1/2" = 1'-0"

0 1/2' 1' 2'
1" = 1'-0"

0 1/2' 1' 1 1/2'
1-1/2" = 1'-0"

WOODS · PEACOCK
ENGINEERING CONSULTANTS
5285 Shawnee Rd. Suite 100, Alexandria, VA 22312
MAIN 703/658-4400 WEB www.woodspeacock.com

PROJECT NO. 19-087-00

PRE-FINAL
REVIEW SET
NOT FOR
CONSTRUCTION

718 ORONOCO ST.
BALCONY
REPLACEMENT

718 ORONOCO STREET
ALEXANDRIA, VA 22314

Rev.	Date	Description	Approved

Sheet Title
ARCHITECTURAL
SECTIONS AND DETAILS
THIRD FLOOR AND ROOF

Drawn:	CAD	Approv:	TMP
Scale:	AS NOTED	Date:	2020-05-22

Sheet No.
A-502
9 of 9