BAR Case # _____

ADDRESS OF PROJECT: ROW adjacent to 411 Gibbons Street

DISTRICT: ☒ **Old & Historic Alexandria** ☐ **Parker – Gray** ☐ **100 Year Old Building**

TAX MAP AND PARCEL: n/a **ZONING:** n/a

APPLICATION FOR: *(Please check all that apply)*

☒ CERTIFICATE OF APPROPRIATENESS

☐ PERMIT TO MOVE, REMOVE, ENCAPSULATE OR DEMOLISH
(Required if more than 25 square feet of a structure is to be demolished/impacted)

☐ WAIVER OF VISION CLEARANCE REQUIREMENT and/or YARD REQUIREMENTS IN A VISION CLEARANCE AREA (Section 7-802, Alexandria 1992 Zoning Ordinance)

☐ WAIVER OF ROOFTOP HVAC SCREENING REQUIREMENT
(Section 6-403(B)(3), Alexandria 1992 Zoning Ordinance)

Applicant: ☐ Property Owner ☒ Business *(Please provide business name & contact person)*

Name: Cellco Partnership dba Verizon Wireless

Address: 9115 Guilford Road, Suite 400

City: Columbia State: MD Zip: 21046

Phone: 703-969-9309 E-mail : joshua.schakola@mastec.com

Authorized Agent *(if applicable)*: ☐ Attorney ☐ Architect ☒ Agent

Name: Joshua Schakola Phone: 703-969-9309

E-mail: joshua.schakola@mastec.com

Legal Property Owner:

Name: Dominion Virginia Energy

Address: 3072 Centreville Rd

City: Herndon State: VA Zip: 20171

Phone: 517-203-5332 E-mail: jarred.t.lampe@dominionenergy.com

☐ **Yes** ☒ **No** Is there an historic preservation easement on this property?
☐ **Yes** ☐ **No** If yes, has the easement holder agreed to the proposed alterations?
☐ **Yes** ☐ **No** Is there a homeowner's association for this property?
☐ **Yes** ☐ **No** If yes, has the homeowner's association approved the proposed alterations?

If you answered yes to any of the above, please attach a copy of the letter approving the project.

BAR Case # _____

NATURE OF PROPOSED WORK: *Please check all that apply*

☐ NEW CONSTRUCTION
☒ EXTERIOR ALTERATION: *Please check all that apply.*

☐ awning	☐ fence, gate or garden wall	☐ HVAC equipment	☐ shutters
☐ doors	☐ windows	☐ siding	☐ shed
☐ lighting	☐ pergola/trellis	☐ painting unpainted masonry	

☒ other Antenna

☐ ADDITION
☐ DEMOLITION/ENCAPSULATION
☐ SIGNAGE

DESCRIPTION OF PROPOSED WORK: *Please describe the proposed work in detail (Additional pages may be attached).*

Install small cell antennas and associated equipment on utility pole

SUBMITTAL REQUIREMENTS:

Items listed below comprise the **minimum supporting materials** for BAR applications. Staff may request additional information during application review. Please refer to the relevant section of the *Design Guidelines* for further information on appropriate treatments.

Applicants must use the checklist below to ensure the application is complete. Include all information and material that are necessary to thoroughly describe the project. Incomplete applications will delay the docketing of the application for review. Pre-application meetings are required for all proposed additions. All applicants are encouraged to meet with staff prior to submission of a completed application.

Demolition/Encapsulation : *All applicants requesting 25 square feet or more of demolition/encapsulation must complete this section. Check N/A if an item in this section does not apply to your project.*

	N/A	
☐	☒	Survey plat showing the extent of the proposed demolition/encapsulation.
☐	☒	Existing elevation drawings clearly showing all elements proposed for demolition/encapsulation.
☐	☒	Clear and labeled photographs of all elevations of the building if the entire structure is proposed to be demolished.
☐	☒	Description of the reason for demolition/encapsulation.
☐	☒	Description of the alternatives to demolition/encapsulation and why such alternatives are not considered feasible.

BAR Case # _____

Additions & New Construction: *Drawings must be to scale and should not exceed 11" x 17" unless approved by staff. Check N/A if an item in this section does not apply to your project.*

N/A

- ☐ ☐ Scaled survey plat showing dimensions of lot and location of existing building and other structures on the lot, location of proposed structure or addition, dimensions of existing structure(s), proposed addition or new construction, and all exterior, ground and roof mounted equipment.
- ☐ ☐ FAR & Open Space calculation form.
- ☐ ☐ Clear and labeled photographs of the site, surrounding properties and existing structures, if applicable.
- ☐ ☐ Existing elevations must be scaled and include dimensions.
- ☐ ☐ Proposed elevations must be scaled and include dimensions. Include the relationship to adjacent structures in plan and elevations.
- ☐ ☐ Materials and colors to be used must be specified and delineated on the drawings. Actual samples may be provided or required.
- ☐ ☐ Manufacturer's specifications for materials to include, but not limited to: roofing, siding, windows, doors, lighting, fencing, HVAC equipment and walls.
- ☐ ☐ For development site plan projects, a model showing mass relationships to adjacent properties and structures.

Signs & Awnings: *One sign per building under one square foot does not require BAR approval unless illuminated. All other signs including window signs require BAR approval. Check N/A if an item in this section does not apply to your project.*

N/A

- ☐ ☐ Linear feet of building: Front:_____Secondary front (if corner lot):_____.
- ☐ ☐ Square feet of existing signs to remain:_____.
- ☐ ☐ Photograph of building showing existing conditions.
- ☐ ☐ Dimensioned drawings of proposed sign identifying materials, color, lettering style and text.
- ☐ ☐ Location of sign (show exact location on building including the height above sidewalk).
- ☐ ☐ Means of attachment (drawing or manufacturer's cut sheet of bracket if applicable).
- ☐ ☐ Description of lighting (if applicable). Include manufacturer's cut sheet for any new lighting fixtures and information detailing how it will be attached to the building's facade.

Alterations: *Check N/A if an item in this section does not apply to your project.*

N/A

- ☒ ☐ Clear and labeled photographs of the site, especially the area being impacted by the alterations, all sides of the building and any pertinent details.
- ☒ ☐ Manufacturer's specifications for materials to include, but not limited to: roofing, siding, windows, doors, lighting, fencing, HVAC equipment and walls.
- ☒ ☐ Drawings accurately representing the changes to the proposed structure, including materials and overall dimensions. Drawings must be to scale.
- ☐ ☐ An official survey plat showing the proposed locations of HVAC units, fences, and sheds.
- ☐ ☐ Historic elevations or photographs should accompany any request to return a structure to an earlier appearance.

BAR Case # _____

ALL APPLICATIONS: *Please read and check that you have read and understand the following items:*

- [x] I have submitted a filing fee with this application. (Checks should be made payable to the City of Alexandria. Please contact staff for assistance in determining the appropriate fee.)
- [x] I understand the notice requirements and will return a copy of the three respective notice forms to BAR staff at least five days prior to the hearing. If I am unsure to whom I should send notice I will contact Planning and Zoning staff for assistance in identifying adjacent parcels.
- [x] I, the applicant, or an authorized representative will be present at the public hearing.
- [x] I understand that any revisions to this initial application submission (including applications deferred for restudy) must be accompanied by the BAR Supplemental form and revised materials.

The undersigned hereby attests that all of the information herein provided including the site plan, building elevations, prospective drawings of the project, and written descriptive information are true, correct and accurate. The undersigned further understands that, should such information be found incorrect, any action taken by the Board based on such information may be invalidated. The undersigned also hereby grants the City of Alexandria permission to post placard notice as required by Article XI, Division A, Section 11-301(B) of the 1992 Alexandria City Zoning Ordinance, on the property which is the subject of this application. The undersigned also hereby authorizes the City staff and members of the BAR to inspect this site as necessary in the course of research and evaluating the application. The applicant, if other than the property owner, also attests that he/she has obtained permission from the property owner to make this application.

APPLICANT OR AUTHORIZED AGENT:

Signature: *Joshua Schakola*

Printed Name: Joshua Schakola

Date: 2/19/20

OWNERSHIP AND DISCLOSURE STATEMENT
Use additional sheets if necessary

1. Applicant. State the name, address and percent of ownership of any person or entity owning an interest in the applicant, unless the entity is a corporation or partnership, in which case identify each owner of more than three percent. The term ownership interest shall include any legal or equitable interest held at the time of the application in the real property which is the subject of the application.

Name	Address	Percent of Ownership
1. Cellco Partnership dba Veri	10170 Junction Drive, Annapolis Junction, MD 20701	n/a
2.		
3.		

2. Property. State the name, address and percent of ownership of any person or entity owning an interest in the property located at_____(address), unless the entity is a corporation or partnership, in which case identify each owner of more than three percent. The term ownership interest shall include any legal or equitable interest held at the time of the application in the real property which is the subject of the application.

Name	Address	Percent of Ownership
1. Cellco Partnership dba Veri	10170 Junction Drive, Annapolis Junction, MD 20701	n/a
2.		
3.		

3. Business or Financial Relationships. Each person or entity listed above (1 and 2), with an ownership interest in the applicant or in the subject property is required to disclose **any** business or financial relationship, as defined by Section 11-350 of the Zoning Ordinance, existing at the time of this application, or within the12-month period prior to the submission of this application with any member of the Alexandria City Council, Planning Commission, Board of Zoning Appeals or either Boards of Architectural Review.

Name of person or entity	Relationship as defined by Section 11-350 of the Zoning Ordinance	Member of the Approving Body (i.e. City Council, Planning Commission, etc.)
1. n/a	n/a	n/a
2.		
3.		

NOTE: Business or financial relationships of the type described in Sec. 11-350 that arise after the filing of this application and before each public hearing must be disclosed prior to the public hearings.

As the applicant or the applicant's authorized agent, I hereby attest to the best of my ability that the information provided above is true and correct.

2/19/20	Joshua Schakola	Joshua Schakola
Date	Printed Name	Signature

verizon

OLD TOWN 3 - SMALL CELL
SOUTH ROYAL STREET ROW ADJACENT TO 411 GIBBONS STREET
ALEXANDRIA, VIRGINIA 22314

GENERAL NOTES

1. THE CONTRACTOR SHALL GIVE ALL NOTICES AND COMPLY WITH ALL LAWS, ORDINANCES, RULES, REGULATIONS AND LAWFUL ORDERS OF ANY PUBLIC AUTHORITY, MUNICIPAL AND UTILITY COMPANY SPECIFICATIONS, AND LOCAL AND STATE JURISDICTIONAL CODES BEARING ON THE PERFORMANCE OF THE WORK. THE WORK PERFORMED ON THE PROJECT AND THE MATERIALS INSTALLED SHALL BE IN STRICT ACCORDANCE WITH ALL APPLICABLE CODES, REGULATIONS, AND ORDINANCES.
2. THE ARCHITECT/ENGINEER HAVE MADE EVERY EFFORT TO SET FORTH IN THE CONSTRUCTION AND CONTRACT DOCUMENTS THE COMPLETE SCOPE OF WORK. THE CONTRACTOR BIDDING THE JOB IS NEVERTHELESS CAUTIONED THAT MINOR OMISSIONS OR ERRORS IN THE DRAWINGS AND OR SPECIFICATIONS SHALL NOT EXCUSE SAID CONTRACTOR FROM COMPLETING THE PROJECT AND IMPROVEMENTS IN ACCORDANCE WITH THE INTENT OF THESE DOCUMENTS.
3. THE CONTRACTOR OR BIDDER SHALL BEAR THE RESPONSIBILITY OF NOTIFYING (IN WRITING) THE VERIZON REPRESENTATIVE OF ANY CONFLICTS, ERRORS OR OMISSIONS PRIOR TO THE SUBMISSION OF CONTRACTOR'S PROPOSAL OR PERFORMANCE OF WORK. IN THE EVENT OF DISCREPANCIES, THE CONTRACTOR SHALL PRICE THE MORE COSTLY OR EXTENSIVE WORK, UNLESS DIRECTED IN WRITING OTHERWISE.
4. THE SCOPE OF WORK SHALL INCLUDE FURNISHING ALL MATERIALS, EQUIPMENT, LABOR AND ALL OTHER MATERIALS AND LABOR DEEMED NECESSARY TO COMPLETE THE WORK/PROJECT AS DESCRIBED HEREIN.
5. THE CONTRACTOR SHALL VISIT THE JOB SITE PRIOR TO THE SUBMISSION OF BIDS OR PERFORMING WORK TO FAMILIARIZE HIMSELF WITH THE FIELD CONDITIONS AND TO VERIFY THAT THE PROJECT CAN BE CONSTRUCTED IN ACCORDANCE WITH THE CONTRACT DOCUMENTS.
6. THE CONTRACTOR SHALL OBTAIN AUTHORIZATION TO PROCEED WITH CONSTRUCTION PRIOR TO STARTING WORK ON ANY ITEM NOT CLEARLY DEFINED BY THE CONSTRUCTION DRAWINGS/CONTRACT DOCUMENTS.
7. THE CONTRACTOR SHALL INSTALL ALL EQUIPMENT AND MATERIALS ACCORDING TO THE MANUFACTURER'S/ VENDOR'S SPECIFICATIONS UNLESS OTHERWISE NOTED OR WHERE LOCAL CODES OR ORDINANCES TAKE PRECEDENCE.
8. THE CONTRACTOR SHALL PROVIDE A FULL SET OF CONSTRUCTION DOCUMENTS AT THE SITE UPDATED WITH THE LATEST REVISIONS AND ADDENDUMS OR CLARIFICATIONS AVAILABLE FOR THE USE BY ALL PERSONNEL INVOLVED WITH THE PROJECT.
9. THE CONTRACTOR SHALL SUPERVISE AND DIRECT THE PROJECT DESCRIBED HEREIN. THE CONTRACTOR SHALL BE SOLELY RESPONSIBLE FOR ALL THE CONSTRUCTION MEANS, METHODS, TECHNIQUES, SEQUENCES AND PROCEDURES AND FOR COORDINATING ALL PORTIONS OF THE WORK UNDER THE CONTRACT.
10. THE CONTRACTOR SHALL BE RESPONSIBLE FOR OBTAINING ALL PERMITS AND INSPECTIONS WHICH MAY BE REQUIRED FOR THE WORK BY THE ARCHITECT/ENGINEER, THE STATE, COUNTY, OR LOCAL GOVERNMENT AUTHORITY.
11. THE CONTRACTOR SHALL MAKE NECESSARY PROVISIONS TO PROTECT EXISTING IMPROVEMENTS, EASEMENTS, PAVEMENTS, CURBING, ETC. DURING CONSTRUCTION. UPON COMPLETION OF WORK, THE CONTRACTOR SHALL REPAIR ANY DAMAGE THAT MAY HAVE OCCURRED DUE TO CONSTRUCTION ON OR ABOUT THE PROPERTY.
12. THE CONTRACTOR SHALL MAINTAIN THE GENERAL WORK AREA AS CLEAN AND HAZARD FREE DURING CONSTRUCTION AND DISPOSE OF ALL DEBRIS, TRASH, AND REMOVE EQUIPMENT NOT SPECIFIED AS REMAINING ON THE PROPERTY. DETAILS OF EQUIPMENT TO BE INCLUDED IN RFQ PACKAGE. PREMISES SHALL BE LEFT IN CLEAN CONDITION AND FREE FROM PAINT SPOTS, DUST, OR SMUDGES OF ANY NATURE.
13. THE CONTRACTOR SHALL COMPLY WITH ALL OSHA REQUIREMENTS AS THEY APPLY TO THIS PROJECT.
14. THE CONTRACTOR SHALL NOTIFY THE VERIZON REPRESENTATIVE WHERE A CONFLICT OCCURS ON ANY OF THE CONTRACT DOCUMENTS. THE CONTRACTOR IS NOT TO ORDER MATERIAL OR CONSTRUCT ANY PORTION OF THE WORK THAT IS IN CONFLICT UNTIL CONFLICT IS RESOLVED BY THE VERIZON REPRESENTATIVE.
15. THE CONTRACTOR SHALL VERIFY ALL DIMENSIONS, ELEVATIONS, PROPERTY LINES, ETC. ON THE JOB.
16. ALL UNISTRUT, HARDWARE, AND OUTDOOR JUNCTION BOXES SHALL BE GALVANIZED STEEL. FOR FIELD CUTS OF GALVANIZED ITEMS, FIRST COAT SHALL BE COLD GALVANIZED AND SECOND COAT SHALL BE MARINE GRADE GALVANIZED.
17. RETURN ANY UNUSED MATERIALS WITH REQUIRED DOCUMENTATION TO THE VERIZON WAREHOUSE WITHIN 14 DAYS OF PROJECT COMPLETION. RETURNED MATERIAL NEEDS TO BE ACCOMPANIED WITH AN RMA FORM AND PACKAGING REQUIREMENTS STIPULATED BY THE VZW CONSTRUCTION ENGINEER.
18. CONTRACTOR IS RESPONSIBLE FOR STORAGE OF ALL MATERIALS PROVIDED BY VERIZON, AND IS LIABLE FOR THOSE MATERIALS ONCE PICKED UP FROM THE WAREHOUSE.
19. CONTRACTOR SHALL PERFORM A PUNCH WALK WITH VZW CONSTRUCTION & OPERATION REPRESENTATIVE PRIOR TO DECLARING CONSTRUCTION COMPLETE.
20. GENERAL CONTRACTOR SHALL PROVIDE A 10LBS. DRY-CHEMICAL FIRE EXTINGUISHER ON SITE DURING CONSTRUCTION. UPON COMPLETION OF ALL WORK CONTRACTOR SHALL REMOVE FIRE EXTINGUISHER FROM SITE.

INDEX OF DRAWINGS

CS-1	SITE LOCATION AND VICINITY PLAN, INDEX OF DRAWINGS, AND CODE ANALYSIS
C-1	SITE PLAN
C-2	SITE DETAILS
C-3	TRANSPORTATION MANAGEMENT PLAN
S-1	STRUCTURAL SECTIONS AND DETAILS
S-2	GENERAL NOTES
E-1	SPECIFICATIONS, SYMBOLS LIST, PANEL SCHEDULE AND DETAILS
E-2	POWER RISER DIAGRAM, EQUIPMENT PLAN, AND NOTES
E-3	GROUNDING DIAGRAM, DETAILS, AND NOTES
E-4	DIAGRAMS

CODE ANALYSIS

APPLICABLE BUILDING CODE:	IBC 2015
USE GROUP:	UTILITY (U)
CONSTRUCTION TYPE:	IIB
UTILITY COMPANY:	DOMINION

RAND MCNALLY LICENSE # R.L.04-5-97

VICINITY PLAN

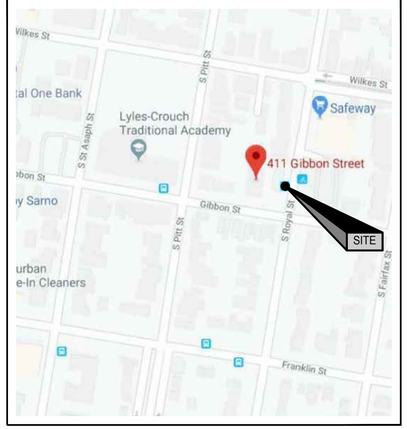

PROJECT DESCRIPTION

THIS PROJECT CONSISTS OF THE INSTALLATION OF VERIZON WIRELESS TELECOMMUNICATIONS EQUIPMENT ON A PROPOSED UTILITY POLE TO REPLACE EXISTING. THE ASSOCIATED ANTENNA WILL BE MOUNTED ON THE PROPOSED UTILITY POLE AT A RAD CENTER OF 31'-6".

DIRECTIONS TO SITE

FROM JUNCTION DRIVE:
- TURN LEFT ONTO DORSEY LANE
- TAKE RAMP ON LEFT FOR MD-32 EAST
- TAKE EXIT #10C RAMP ON RIGHT TO MERGE ONTO BALTIMORE WASHINGTON PARKWAY SOUTH
- TAKE EXIT ONTO I-495/I-95 TOWARDS RICHMOND VA
- KEEP RIGHT AT FORK TO STAY ON I-495 S/I-95 S
- TAKE EXIT #177B-C TO MERGE ONTO US-1 NORTH/ SOUTH PATRICK STREET TOWARD ALEXANDRIA
- MERGE ONTO US-1 NORTH / SOUTH PATRICK STREET
- TURN RIGHT ONTO FRANKLIN STREET
- TURN LEFT ONTO SOUTH ROYAL STREET
- DESTINATION WILL BE ON THE LEFT

VERIZON WIRELESS REVIEW

BUILDING OWNER	DATE
ENGINEERING	DATE
OPERATIONS	DATE
CONSTRUCTION	DATE

TEI
TELEGENT ENGINEERING INC.
2216 Commerce Road, Suite 1
Forest Hill, MD 21050
410-692-5816
www.tei-eng.com

COMMONWEALTH OF VIRGINIA
TIMOTHY JOHN SMIDT
NO. 0205520
PROFESSIONAL ENGINEER

verizon
OLD TOWN 3 - SMALL CELL
SOUTH ROYAL STREET ROW ADJACENT TO 411 GIBBONS STREET, ALEXANDRIA
CITY OF ALEXANDRIA, VIRGINIA 22314

REVISIONS:

NO.	DESCRIPTION	DATE
	PERMIT DWGS.	1/22/20

LAST REV.:
PROJECT NO: 19154B
DATE: JANUARY 22, 2020
SCALE: AS NOTED
TITLE: SITE LOCATION AND VICINITY PLAN, INDEX OF DRAWINGS, AND CODE ANALYSIS
SHEET: CS-1

TEI#19154B

SITE PLAN

SCALE: 1" = 30'-0"

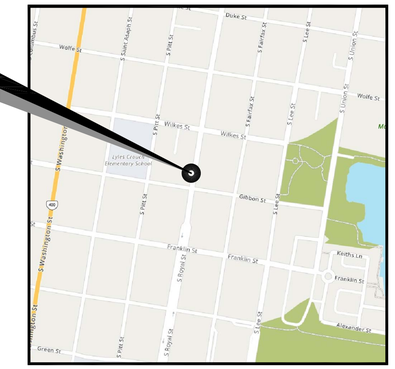

VICINITY MAP

SCALE: 1" = 500'

SITE NOTES:

1. APPLICANT: VERIZON WIRELESS
   10170 JUNCTION DRIVE, STE 300
   ANNAPOLIS JUNCTION, MD 20701
   TEL. (301) 512-2000
   FAX (301) 512-2186

   APPLICANT'S ATTORNEY: FRANK N. STEARNS, ESQ.
   DONOHUE & STEARNS, PLC
   201 LIBERTY STREET
   LEESBURG, VIRGINIA 20175
   (703) 544-1123

2. PROPERTY OWNER: DEPARTMENTAL PROGRESSIVE CLUB, INC.
   411 GIBBON STREET
   ALEXANDRIA VA, 22314

3. SITE DATA: MAP-BLOCK-LOT NUMBER: 080.02-04-48
   ACCOUNT NUMBER: 11762050
   TRACT AREA: 18,347 SF
   ADDRESS: 411 GIBBON STREET
   ALEXANDRIA VA, 22301
   EXISTING USE: GENERAL COMMERCIAL (400)

4. ZONING: RM

5. HORIZONTAL AND VERTICAL CONTROL SHOWN HEREON IS BASED ON SATELLITE IMAGERY PROGRAMS AND INFORMATION PROVIDED BY VERIZON WIRELESS.

   LATITUDE: N39° 47' 57.2856" (39.799246°) GROUND ELEVATION: 15.0'± AMSL (AVG)
   LONGITUDE: N77° 02' 41.6004" (-77.044884°)

6. TOTAL DISTURBED AREA = 8 SF

7. THE PROPOSED FACILITIES WILL CONSIST OF THREE (3) ANTENNAS WITH ASSOCIATED EQUIPMENT MOUNTED ON A REPLACEMENT UTILITY POLE TO REPLACE EXISTING, WITH A RAD CENTER AT AN ELEVATION OF 31'-6" ABOVE GRADE LEVEL FOR THE RECEPTION OF VERIZON WIRELESS TELECOMMUNICATIONS.

8. THE APPLICANT WILL PROVIDE A CERTIFICATION FROM A REGISTERED ENGINEER THAT THE STRUCTURE WILL MEET THE APPLICABLE DESIGN STANDARDS FOR WIND LOADS PER THE REQUIREMENTS OF THE TELECOMMUNICATIONS INDUSTRY ASSOCIATION.

9. IF THE ANTENNAS ARE NO LONGER USED FOR TELECOMMUNICATIONS PURPOSES FOR A CONTINUOUS PERIOD OF ONE (1) YEAR, THEY SHALL BE REMOVED BY THE ANTENNA OWNER AT OWNER'S EXPENSE.

10. NO WATER OR SANITARY UTILITIES ARE REQUIRED FOR THE OPERATION OF THIS FACILITY.

11. STORMWATER MANAGEMENT NOTE: NO STORMWATER MANAGEMENT IS REQUIRED FOR THIS SITE.

12. BOUNDARY SHOWN PER COUNTY RECORDS.

13. THIS PLAN PREPARED WITHOUT THE BENEFIT OF A TITLE REPORT. PLAN IS SUBJECT TO EASEMENTS AND RESTRICTIONS OF RECORD.

14. ALL DETAILS SHOWN ARE "STANDARD" OR "TYPICAL" FOR REFERENCE ONLY. FOR ACTUAL DETAILS, SEE ARCHITECTURAL, STRUCTURAL, OR CONSTRUCTION PLANS BY OTHERS.

15. STRUCTURAL ANALYSIS/DESIGN TO BE PERFORMED BY OTHERS AT CLIENT AND/OR OWNER'S DISCRETION PRIOR TO COMMENCEMENT OF ANY WORK.

16. THE COMMUNICATION EQUIPMENT SHALL BE UNMANNED, WITH INFREQUENT VISITS (FOUR OR FEWER PER YEAR) BY MAINTENANCE PERSONNEL, AND WITH ACCESS AND PARKING FOR NO MORE THAN ONE VEHICLE. THE PROPOSED FACILITY IS NOT FOR HUMAN HABITATION AND THEREFORE HANDICAP ACCESS IS NOT REQUIRED.

GENERAL NOTES

1. CONTRACTOR SHALL NOTIFY "MISS UTILITY" (811) 48 HOURS PRIOR TO DOING ANY EXCAVATION IN THIS AREA. CONTRACTOR SHALL CONTACT A SUBSURFACE UTILITY LOCATOR FOR LOCATION OF EXISTING UTILITIES PRIOR TO COMMENCEMENT OF ANY CONSTRUCTION ACTIVITIES. CONTRACTOR SHALL VERIFY EXISTING UTILITY LOCATIONS BY TEST PIT AS NECESSARY. LOCATION OF UTILITIES SHOWN ON THIS PLAN ARE APPROXIMATE AND FOR PLANNING PURPOSES ONLY. THE CONTRACTOR SHALL DETERMINE THE EXACT LOCATION OF ALL EXISTING UTILITIES BEFORE COMMENCING WORK, AND AGREES TO BE FULLY RESPONSIBLE FOR ANY AND ALL DAMAGES WHICH MIGHT BE OCCASIONED BY THE CONTRACTOR'S FAILURE TO EXACTLY LOCATE AND PRESERVE ANY AND ALL UNDERGROUND UTILITIES. DAMAGE TO UTILITIES OR PROPERTY OF OTHER BY THE CONTRACTOR DURING CONSTRUCTION SHALL BE REPAIRED TO PRECONSTRUCTION CONDITIONS BY THE CONTRACTOR.

2. ALL WORK SHALL BE COMPLETED IN ACCORDANCE WITH ALL STATE AND LOCAL CODES AND ORDINANCES, THE LATEST EDITION THEREOF.

3. ANY PERMITS WHICH MUST BE OBTAINED SHALL BE THE CONTRACTOR'S RESPONSIBILITY. CONTRACTOR SHALL SECURE ALL NECESSARY PERMITS FOR THIS PROJECT FROM ALL APPLICABLE GOVERNMENTAL AGENCIES. THE CONTRACTOR SHALL BE RESPONSIBLE FOR ABIDING BY ALL CONDITIONS AND REQUIREMENTS OF THE PERMITS.

4. CONTRACTOR SHALL COORDINATE ALL UTILITY CONNECTIONS WITH APPROPRIATE UTILITY OWNERS.

5. THESE PLANS ARE NOT FOR RECORDATION OR CONVEYANCE.

6. EXISTING PAVEMENT AND OTHER SURFACES DISTURBED BY CONTRACTOR (WHICH ARE NOT TO BE REMOVED) SHALL BE REPAIRED TO PRECONSTRUCTION CONDITIONS BY THE CONTRACTOR.

811

Know what's **below.**
Call before you dig.

PROTECT YOURSELF, GIVE THREE WORKING DAYS NOTICE

THIS DRAWING DOES NOT INCLUDE NECESSARY COMPONENTS FOR CONSTRUCTION SAFETY. ALL CONSTRUCTION MUST BE DONE IN COMPLIANCE WITH THE OCCUPATIONAL SAFETY AND HEALTH ACT OF 1970 AND ALL RULES AND REGULATIONS THERE TO APPURTENANT.

MRA
MORRIS & RITCHIE ASSOCIATES, INC.
Civil / Structural Engineers
1220-C East Joppa Road, Suite 505
Towson, Maryland 21286
410-821-1690
410-821-1746 Fax

COMMONWEALTH OF VIRGINIA
RICHARD J. DEVER
PROFESSIONAL ENGINEER

verizon
OLD TOWN 3 - SMALL CELL
SOUTH ROYAL STREET ROW ADJACENT TO 411 GIBBONS STREET
ALEXANDRIA, VIRGINIA 22314 (CITY OF ALEXANDRIA)

REVISIONS:

NO.	DESCRIPTION	DATE
	PERMIT DWGS	01/22/20

DESIGNED BY:	RJD
DRAWN BY:	JCW
PROJECT NO:	10427.2841
DATE:	01/17/2020
SCALE:	AS NOTED

TITLE: **Site Plan**

SHEET: **C-1**

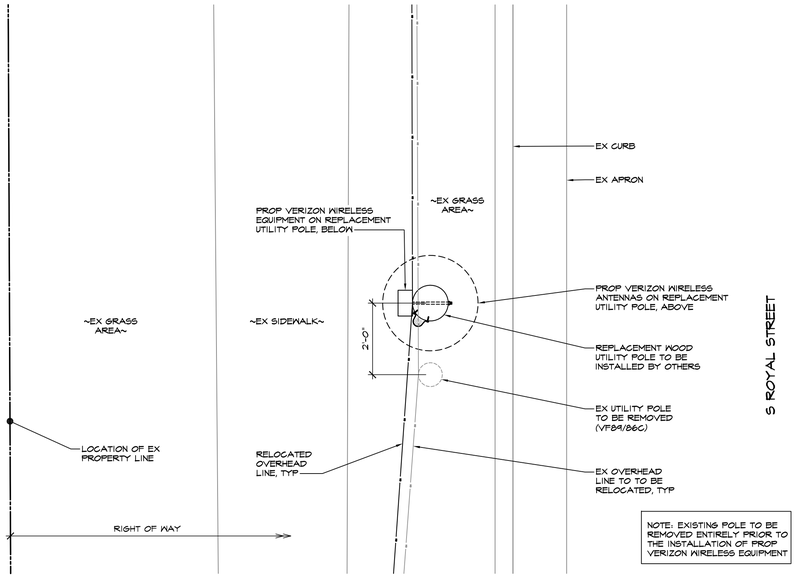

NOTE: EXISTING POLE TO BE REMOVED ENTIRELY PRIOR TO THE INSTALLATION OF PROP VERIZON WIRELESS EQUIPMENT

ENLARGED EQUIPMENT LAYOUT

SCALE: ½" = 1'-0"

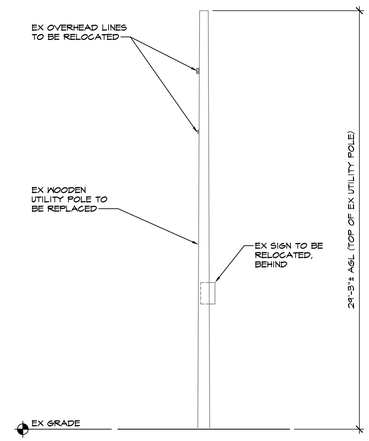

EXISTING UTILITY POLE ELEVATION

SCALE: 1" = 5'-0"

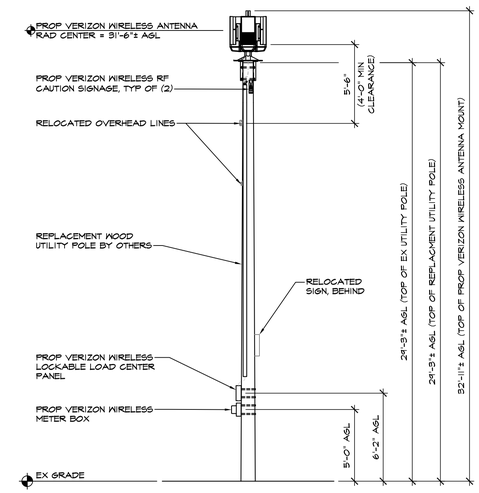

VOLUME CALCULATIONS	
PROPOSED	
ANTENNAS:	5.00± CF
EQUIPMENT:	0.50± CF

REPLACEMENT UTILITY POLE ELEVATION

SCALE: 1" = 5'-0"

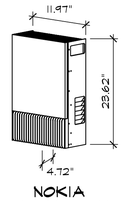

NOKIA
AEUB AIRSCALE

VERIZON WIRELESS ANTENNA DETAILS

NOT TO SCALE

AIRSCALE CORE OUTDOOR RRH 175W ASODA	
MANUFACTURER:	NOKIA
DIMENSIONS:	3.4"Dx11.1"Wx14.6"H (NO BRACKET)
WEIGHT:	24.3 LBS

NOTES:

1. INSTALL RRH PER MANUFACTURER'S RECOMMENDATIONS.
2. FIBER, DC POWER & GROUND CONNECTIONS NOT SHOWN.

NOKIA AIRSCALE CORE OUTDOOR RRH 175 W ASODA DETAIL

NOT TO SCALE

811
Know what's **below.**
Call before you dig.

PROTECT YOURSELF, GIVE THREE WORKING DAYS NOTICE

THIS DRAWING DOES NOT INCLUDE NECESSARY COMPONENTS FOR CONSTRUCTION SAFETY. ALL CONSTRUCTION MUST BE DONE IN COMPLIANCE WITH THE OCCUPATIONAL SAFETY AND HEALTH ACT OF 1970 AND ALL RULES AND REGULATIONS THERE TO APPURTENANT.

MRA
MORRIS & RITCHIE ASSOCIATES, INC.
Civil / Structural Engineers
1220-C East Joppa Road, Suite 505
Towson, Maryland 21286
410-821-1690
410-821-1746 Fax

verizon
OLD TOWN 3 - SMALL CELL
SOUTH ROYAL STREET ROW ADJACENT TO 411 GIBBONS STREET
ALEXANDRIA, VIRGINIA 22314 (CITY OF ALEXANDRIA)

REVISIONS:

NO.	DESCRIPTION	DATE
	PERMIT DWGS	01/22/20

DESIGNED BY:	RJD
DRAWN BY:	JCW
PROJECT NO:	10427.2841
DATE:	01/17/2020
SCALE:	AS NOTED

TITLE:

Site Details

SHEET:

C-2

TRANSPORTATION MANAGEMENT PLAN

TEMPORARY TRAFFIC CONTROL PLAN NOTES & WORK AREA PROTECTION MANUAL TTC'S

Virginia Department of Transportation — VDOT

VERIFICATION OF COMPLETION OF ADVANCED WORK ZONE TRAFFIC CONTROL TRAINING AND FLAGGER CERTIFICATION

This is to verify that **Jon K. Erickson** has successfully completed training and an examination by the Department on the proper practices and methods for the installation, maintenance, removal of temporary traffic control devices and flagging operations.

Date: 6/25/2019 — State Traffic Engineer

Verification No.: 092519413 — Expiration Date: 9/30/2023

PROJECT INFORMATION

1. THE PROJECT'S TMP PLAN HAS BEEN DESIGNED IN CONFORMANCE WITH TMP TYPE A.
2. WORK ZONE AREAS SHALL BE SETUP AS SHOWN ON TTC'S ON THIS PLAN SHEET. THE WORK ZONE LENGTHS AND WIDTHS MAY VARY BY LOCATION IN ACCORDANCE WITH APPLICABLE TTC.
3. CONSTRUCTION HOURS: 9AM–3:30PM MONDAY–THURSDAY. 9AM–2PM FRIDAY.
   NO WORK ON NIGHTS, WEEKENDS OR HOLIDAYS. NO LANE CLOSURES WILL BE ALLOWED FROM NOON ON THE DAY BEFORE A HOLIDAY UNTIL NOON ON THE WORKDAY FOLLOWING THE HOLIDAY.
   HOLIDAYS INCLUDE ALL STATE AND FEDERAL HOLIDAYS.
4. EXISTING INTERSECTIONS: THE NEAREST INTERSECTION IS S ROYAL ST AND GIBBON ST.

   EXISTING PEDESTRIAN ACCESS POINTS: THERE IS EXISTING SIDEWALK LOCATED WITHIN THE PROJECT LIMITS.

   EXISTING BUS STOPS: THERE IS ONE BUS STOP WITHIN THE PROJECT LIMITS LOCATED ON S ROYAL ST. THE BUS STOP WILL BE RELOCATED DURING WORK.

   EXISTING ENTRANCES: THERE IS AN ENTRANCE ON S ROYAL ST TO THE DEPARTMENTAL PROGRESSIVE CLUB LOCATED WITHIN THE CONSTRUCTION LIMITS.
5. THE TRAFFIC ON THE ROADWAY CONSIST PRIMARILY OF PASSENGER VEHICLES AND PEDESTRIANS. THE SURROUNDING AREA IS RESIDENTIAL.
6. THE CONTRACTOR SHALL:

   DESIGNATE A PERSON ASSIGNED TO THE PROJECT WHO WILL HAVE THE PRIMARY RESPONSIBILITY, WITH SUFFICIENT AUTHORITY, FOR IMPLEMENTING THE TMP/SOC AND OTHER SAFETY AND MOBILITY ASPECTS OF THE PERMITTED WORK. THIS PERSON SHALL COORDINATE WITH THE INSPECTOR FOR THE DURATION OF CONSTRUCTION.

   ENSURE THAT PERSONNEL IMPLEMENTING THE MOT ARE TRAINED IN TRAFFIC CONTROL TO A LEVEL COMMENSURATE WITH THEIR RESPONSIBILITY IN ACCORDANCE WITH VIRGINIA WORK ZONE TRAFFIC CONTROL TRAINING GUIDELINES.

   INFORM COUNTY OF ANY WORK REQUIRING LANE SHIFTS, LANE CLOSURES, AND/OR PHASE CHANGES A MINIMUM OF TWO WORKING DAYS PRIOR TO IMPLEMENTING THIS ACTIVITY

   PERFORM REVIEWS OF THE CONSTRUCTION AREA TO ENSURE COMPLIANCE WITH CONTRACT DOCUMENTS AT REGULARLY SCHEDULED INTERVALS AT THE DIRECTION OF COUNTY ENGINEERS. CONTRACTOR SHALL MAINTAIN A COPY OF THE TEMPORARY TRAFFIC CONTROL PLAN AT THE WORK SITE AT ALL TIMES.

   COORDINATE WITH CITY OF ALEXANDRIA POLICE DEPARTMENT AND CITY OF ALEXANDRIA FIRE/RESCUE DEPARTMENT FOR ANY LANE CLOSURES AND ANY DETOURS OF ANY NATURE, AT NO ADDITIONAL COST TO THE PROJECT.

   SCHEDULE ALL PHASES OF CONSTRUCTION IN SUCH A MANNER THAT WATER, SANITARY SEWER, CABLE, FIBER CABLE/OPTIC CABLE, ANY OVERHANGING UTILITIES, AND ANY UNDERGROUND UTILITIES SERVICES WILL NOT BE INTERRUPTED.
7. THIS TMP PLAN IS INTENDED AS A GUIDE. IF THE CONTRACTOR IS TO DEVIATE FROM THE APPROVED TMP, A NEW OR REVISED TMP MUST BE SUBMITTED TO COUNTY FOR REVIEW AND APPROVAL.
8. CONTRACTOR SHALL ENSURE POSITIVE DRAINAGE FOR THE DURATION OF THE PROJECT. CONTRACTOR SHALL ADD ANY ADDITIONAL TEMPORARY MEASURES NECESSARY TO FACILITATE PROPER, POSITIVE DRAINAGE FOR THE DURATION OF CONSTRUCTION.
9. WHERE GROUP 2 CHANNELIZING DEVICES ARE USED TO SEPARATE THE CONSTRUCTION AREA AND TRAFFIC, A MINIMUM CLEAR ZONE AREA SUCH AS DEFINED IN THE VWAPM IS TO BE MAINTAINED.
10. CONTRACTOR IS TO COORDINATE WITH CITY FOR LOCATION(S) OF THE CONSTRUCTION STAGING AREA. CONTRACTOR IS RESPONSIBLE FOR OBTAINING ALL PERMITS AND/OR EASEMENTS AS NECESSARY.
11. CONTRACTOR TO COORDINATE WITH CITY OF ALEXANDRIA FOR BUS STOP RELOCATION.
12. IMPLEMENTING THE TRANSPORTATION MANAGEMENT PLAN
    DURING THE FIRST DAY OF THE NEW WORK ZONE TRAFFIC PATTERN, THE PROJECT'S MANAGER AND CITY'S INSPECTOR SHALL INSPECT THE WORK ZONE TO ENSURE COMPLIANCE WITH THE TMP. ON THE THIRD TO FIFTH DAY OF IMPLEMENTATION OF THE TMP'S NEW WORK ZONE TRAFFIC PATTERN THE CONSTRUCTION INSPECTOR SHALL CONDUCT AN ON–SITE REVIEW OF THE WORK ZONE'S PERFORMANCE IN COORDINATION WITH COUNTY AND RECOMMEND TO THE CONTRACTOR ANY REQUIRED CHANGES TO THE TMP TO ENHANCE THE WORK ZONE'S SAFETY AND MOBILITY. ALL SUCH CHANGES SHALL BE DOCUMENTED. AN ON–SITE REVIEW OF THE PROJECT'S WORK ZONE TRAFFIC CONTROL BY THE PROJECT MANAGER AND CONTRACTOR SHALL BE CONDUCTED (WITH COORDINATION FROM COUNTY) WITHIN 48 HOURS OF ANY FATAL INCIDENT/CRASH WITHIN THE WORK ZONE.
13. PUBLIC COMMUNICATIONS PLAN
    THE CONTRACTOR SHALL BE RESPONSIBLE FOR:
    A. NOTIFYING THE PROJECT MANAGER AND CITY INSPECTOR TWO WEEKS IN ADVANCE OF ANY SCHEDULED WORK PLANS AND TRAFFIC DELAYS.
    B. NOTIFYING THE PROJECT MANAGER, CITY INSPECTOR, AND CORRESPONDING COUNTY ENGINEER OF ANY UNSCHEDULED TRAFFIC DELAYS.
16. TRANSPORTATION OPERATIONS
    THE CONTRACTOR SHALL BE RESPONSIBLE FOR IMPLEMENTING AND PROVIDING THE FOLLOWING:
    A. NOTIFY THE REGIONAL TRANSPORTATION OPERATIONS CENTER (TOC) 1 WEEK IN ADVANCE IN ORDER TO PLAN LANE CLOSURE INFORMATION ON THE 511 SYSTEM AND VA–TRAFFIC.
    B. IMMEDIATELY REPORT ANY TRAFFIC INCIDENTS THAT MAY OCCUR IN THE WORK ZONE.
    C. NOTIFY THE PROJECT'S CONSTRUCTION INSPECTOR AND COUNTY ENGINEER OF ANY INCIDENTS AND EXPECTED TRAFFIC DELAYS.
    D. WITHIN 24 HOURS OF ANY INCIDENTS WITHIN THE CONSTRUCTION WORK ZONE, A REVIEW OF THE TRAFFIC CONTROLS SHALL BE COMPLETED AND NECESSARY ADJUSTMENT MADE TO REDUCE THE FREQUENCY AND SEVERITY OF ANY FUTURE INCIDENTS.
17. CONTACT NUMBERS

PROJECT MANAGER:	TBD
CITY INSPECTOR:	TBD
EMERGENCY CALL:	911

NON–EMERGENCY NUMBERS:

CITY OF ALEXANDRIA POLICE:	703–746–4444
CITY OF ALEXANDRIA FIRE & RESCUE:	703–746–4357

GENERAL CONSTRUCTION NOTES

NOTE: VWAPM VIRGINIA WORK AREA PROTECTION MANUAL (2011) INCLUDING REVISION 1 DATED 2015.

1. THE CONTRACTOR SHALL MAKE ANY NECESSARY ADJUSTMENTS DURING BOTH WORK AND NON–WORK HOURS TO ENSURE THE PROTECTION AND SAFETY OF PEDESTRIANS, VEHICULAR TRAFFIC, AND THE GENERAL PUBLIC FROM ANY CONSTRUCTION RELATED ACTIVITY, CONSTRUCTION EQUIPMENT, AND THE CONSTRUCTION SITE ITSELF.

Page 6H-14 — April 2015

Typical Traffic Control
Stationary Operation on a Shoulder
(Figure TTC-4.1)
NOTES

Standard

1. **For long-term stationary work (more than 3 days) on divided highways having a median wider than 8', sign assemblies on both sides of the roadway shall be required as shown (ROAD WORK AHEAD (W20-1), RIGHT SHOULDER CLOSED AHEAD (W21-5bR), RIGHT SHOULDER CLOSED (W21-5aR)[1]), even though only one shoulder is being closed. For operations less than 3 days in duration, sign assemblies will only be required on the side where the shoulder is being closed and a RIGHT SHOULDER CLOSED (W21-5aR)[1] sign shall be added to that side.**

Guidance

2. *Sign spacing should be 1300'-1500' for Limited Access highways. For all other roadways, the sign spacing should be 500'-800' where the posted speed limit is greater than 45 mph, and 350'-500' where the posted speed limit is 45 mph or less.*

Option:

3. The SHOULDER WORK (W21-5) sign on an intersecting roadway may be omitted where drivers emerging from that roadway will encounter another advance warning sign prior to this activity area.
4. For short duration operations of 60 minutes or less, all signs and channelizing devices may be eliminated if a vehicle with activated high-intensity amber rotating, flashing, or oscillating lights is used.

Standard:

5. **Vehicle hazard warning signals shall not be used instead of the vehicle's high-intensity amber rotating, flashing, or oscillating lights. Vehicle hazard warning signals can be used to supplement high-intensity amber rotating, flashing, or oscillating, lights.**
6. **Taper length (L) and channelizing device spacing shall be at the following:**

Taper Length (L)				
Speed Limit (mph)	Lane Width (Feet)			
	9	10	11	12
25	95	105	115	125
30	135	150	165	180
35	185	205	225	245
40	240	270	295	320
45	405	450	495	540
50	450	500	550	600
55	495	550	605	660
60	540	600	660	720
65	585	650	715	780
70	630	700	770	840
Minimum taper lengths for Limited Access highways shall be 1000 feet.				
Shoulder Taper = ⅓ L Minimum				

Channelizing Device Spacing		
Location	Speed Limit (mph)	
	0 - 35	36 +
Transition Spacing	20'	40'
Travelway Spacing	40'	80'
Construction Access*	80'	120'
* Spacing may be increased to this distance, but shall not exceed one access per ¼ mile.		

On roadways with paved shoulders having a width of 8 feet or more, channelizing devices shall be used to close the shoulder in advance of the merging taper to direct vehicular traffic to remain within the traveled way.

7. **The buffer space length shall be as shown in Table 6H-3 on Page 6H-5 for the posted speed limit.**
8. **A truck-mounted attenuator (TMA) shall be used on the shadow vehicle on Limited Access highways and multi-lane roadways with posted speed limit equal to or greater than 45 mph for operations with a duration greater than 60 minutes.**
9. **When a side road intersects the highway within the temporary traffic control zone, additional traffic control devices shall be placed as needed.**

1: Revision 1 – 4/1/2015

April 2015 — Page 6H-15

Stationary Operation on a Shoulder
(Figure TTC-4.1)

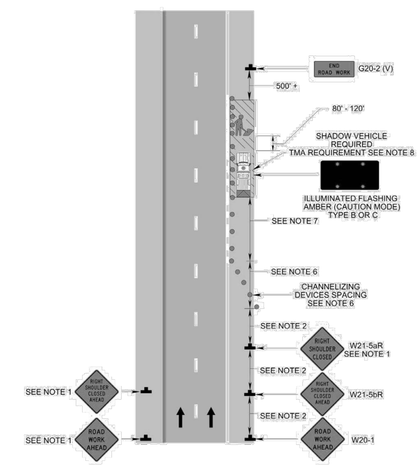

Page 6H-76 — August 2011

Typical Traffic Control
Sidewalk Closure and Bypass Sidewalk Operation
(Figure TTC-35.0)
NOTES

Standard:

1. **When crosswalks or other pedestrian facilities are closed or relocated, temporary facilities shall be detectable and shall include accessibility features consistent with the features present in the existing pedestrian facility.**

Guidance:

2. *Where high speeds are anticipated, a temporary traffic barrier and, if necessary, a crash cushion should be used to separate the temporary sidewalks from vehicular traffic.*
3. *Audible information devices should be considered where midblock closings and changed crosswalk areas cause inadequate communication to be provided to pedestrians who have visual disabilities.*
4. *Temporary markings should be considered for operations exceeding three days in duration.*

Option:

5. Only the TTC devices related to pedestrians are shown. Other devices, such as lane closure signing or ROAD NARROWS (W5-1) signs, may be used to control vehicular traffic.
6. For nighttime closures, Type A Flashing warning lights may be used on barricades that support signs and close sidewalks.
7. Signs, such as KEEP RIGHT (R4-V7R) and KEEP LEFT (R4-V7L), may be placed along a temporary sidewalk to guide or direct pedestrians.

Standard:

8. **All sidewalk closures shall be closed with Type 3 Barricades.**

August 2011 — Page 6H-77

Sidewalk Closure and Bypass Sidewalk Operation
(Figure TTC-35.0)

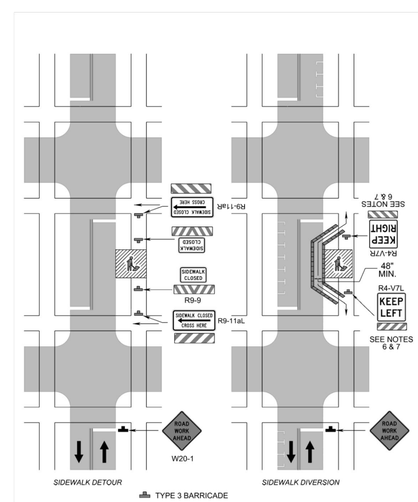

MRA — MORRIS & RITCHIE ASSOCIATES, INC.
Civil/Structural Engineers
2220-C East Joppa Road, Suite 205
Towson, Maryland 21286
410-821-1690
410-821-1748 Fax

COMMONWEALTH OF VIRGINIA — JON K. ERICKSON — Lic. No. 32355 — 01/22/20 — PROFESSIONAL ENGINEER

verizon
OLD TOWN 3 - SMALL CELL
SOUTH ROYAL STREET ROW ADJACENT TO 411 GIBBONS STREET
ALEXANDRIA, VIRGINIA 22314 (CITY OF ALEXANDRIA)

REVISIONS:

NO.	DESCRIPTION	DATE
	PERMIT DWGS	01/22/20

DESIGNED BY: RJD
DRAWN BY: JCW
PROJECT NO: 10421.2841
DATE: 01/17/2020
SCALE: AS NOTED

TITLE: TRANSPORTATION MANAGEMENT PLAN

SHEET: C-3

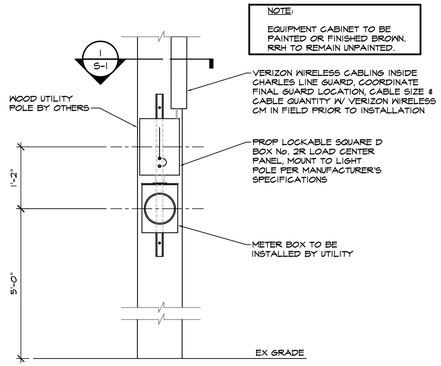

A POLE EQUIPMENT FRONT ELEVATION
SCALE: 3/4" = 1'-0"

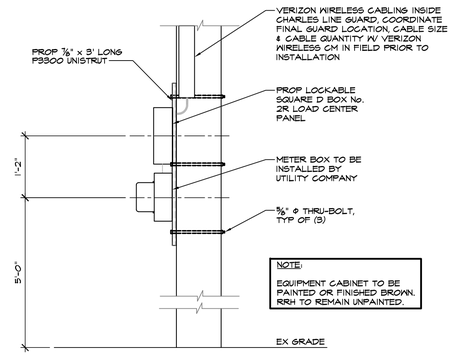

B POLE EQUIPMENT SIDE ELEVATION
SCALE: 3/4" = 1'-0"

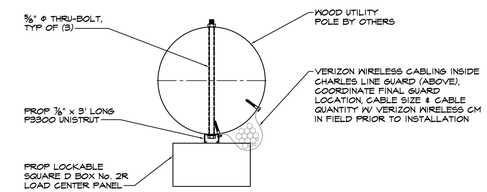

1/S-1 EQUIPMENT MOUNT
SCALE: 1 1/2" = 1'-0"

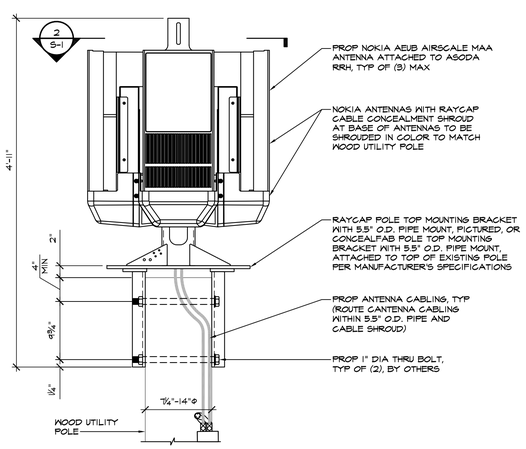

C CANTENNA & 5G PANEL ANTENNA MOUNT
SCALE: 1" = 1'-0"

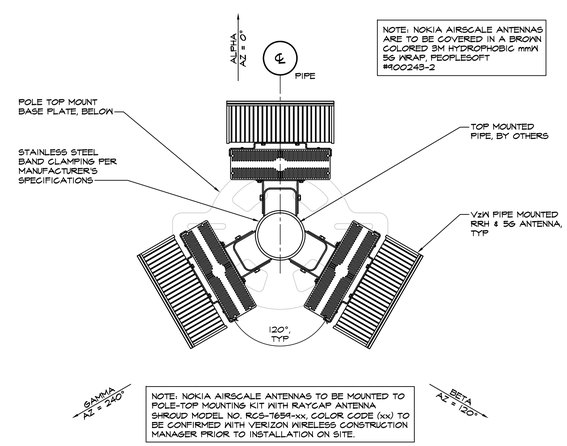

2/S-1 5G PANEL ANTENNA SECTION
SCALE: 1-1/2" = 1'-0"

811
Know what's **below.**
Call before you dig.

PROTECT YOURSELF, GIVE THREE WORKING DAYS NOTICE

THIS DRAWING DOES NOT INCLUDE NECESSARY COMPONENTS FOR CONSTRUCTION SAFETY. ALL CONSTRUCTION MUST BE DONE IN COMPLIANCE WITH THE OCCUPATIONAL SAFETY AND HEALTH ACT OF 1970 AND ALL RULES AND REGULATIONS THERE TO APPURTENANT.

MRA
MORRIS & RITCHIE ASSOCIATES, INC.
Civil / Structural Engineers
1220-C East Joppa Road, Suite 505
Towson, Maryland 21286
410-821-1690
410-821-1748 Fax

verizon
OLD TOWN 3 - SMALL CELL
SOUTH ROYAL STREET ROW ADJACENT TO 411 GIBBONS STREET
ALEXANDRIA, VIRGINIA 22314 (CITY OF ALEXANDRIA)

REVISIONS:

NO.	DESCRIPTION	DATE
	PERMIT DWGS	01/22/20

DESIGNED BY:	RJD
DRAWN BY:	JCW
PROJECT NO:	10427.2841
DATE:	01/17/2020
SCALE:	AS NOTED

TITLE:
Structural Sections & Details

SHEET:
S-1

GENERAL STRUCTURAL NOTES

BUILDING CODES

A. ALL CONSTRUCTION SHALL CONFORM WITH THE VIRGINIA UNIFORM STATEWIDE BUILDING CODE 2015 CONSTRUCTION CODE, THE TIA STANDARD (TIA-222-G) AND ALL SUBSEQUENT SUPPLEMENTS, THE INTERNATIONAL BUILDING CODE (IBC 2015) AND ALL SUBSEQUENT SUPPLEMENTS & DOCUMENTS.

B. IN ADDITION, ALL CONSTRUCTION SHALL CONFORM WITH ANY LOCAL CODES AND REQUIREMENTS.

DESIGN LOADS

A. THE DESIGN DEAD LOADING FOR ALL FRAMING IS BASED ON THE CONSTRUCTION MATERIALS SHOWN ON THE DRAWINGS. ALL FRAMING IS DESIGNED FOR THE WEIGHT OF THE EQUIPMENT INDICATED ON THE DRAWINGS.

B. WIND LOAD DESIGN DATA

BASIC WIND SPEED (ULTIMATE 3-SECOND GUST):	116 MPH
BASIC WIND SPEED (NOMINAL 3-SECOND GUST):	90 MPH
RISK CATEGORY:	II
WIND EXPOSURE CATEGORY:	C

C. SEISMIC LOAD DESIGN DATA

NOT APPLICABLE: Ss < 1.0

MISCELLANEOUS

A. SHOP DRAWINGS FOR ALL STRUCTURAL ELEMENTS SHOWN ON THE CONTRACT DOCUMENTS MUST BE SUBMITTED BY THE CONTRACTOR OR OWNER FOR REVIEW BY THE ENGINEER. IF THE CONTRACTOR OR OWNER FAILS TO SUBMIT THE SHOP DRAWINGS, THE ENGINEER WILL NOT BE RESPONSIBLE FOR STRUCTURAL CERTIFICATION AND DESIGN OF THE PROJECT. THE SHOP DRAWINGS SHALL INDICATE ANY DEVIATIONS OR OMISSIONS FROM THE CONTRACT DOCUMENTS. THE GENERAL CONTRACTOR SHALL REVIEW ALL SHOP DRAWINGS PRIOR TO SUBMISSION AND MAKE ALL CORRECTIONS DEEMED NECESSARY.

B. SEE CIVIL AND MEP CONTRACT DOCUMENTS FOR ADDITIONAL INFORMATION RELATING TO THE COORDINATION OF STRUCTURAL COMPONENTS.

C. THE CONTRACTOR SHALL NOT SUBMIT REPRODUCTIONS OF THE STRUCTURAL CONTRACT DOCUMENTS AS SHOP DRAWINGS.

D. SCALES SHOWN ON THE STRUCTURAL CONTRACT DRAWINGS ARE FOR GENERAL INFORMATION ONLY. DIMENSIONAL INFORMATION SHALL NOT BE OBTAINED BY SCALING THE DRAWINGS.

E. APPLY DETAILS, SECTIONS AND NOTES ON THE DRAWINGS WHERE CONDITIONS ARE SIMILAR TO THOSE INDICATED BY DETAIL, DETAIL TITLE OR NOTE.

STRUCTURAL AND MISCELLANEOUS STEEL

A. ALL STEEL CONSTRUCTION SHALL CONFORM TO THE LATEST EDITION OF THE AISC STEEL CONSTRUCTION MANUAL "SPECIFICATION FOR STRUCTURAL STEEL BUILDINGS" (ANSI/AISC 360) AND THE AISC "CODE OF STANDARD PRACTICE FOR STEEL BUILDINGS AND BRIDGES".

B. ALL MISCELLANEOUS STEEL (CHANNELS AND PLATES) SHALL CONFORM TO ASTM A36 (F_y = 36 KSI).

C. ALL HSS SQUARE OR RECTANGULAR SHAPES SHALL CONFORM TO ASTM A500, GRADE B (F_Y = 46 KSI).

D. ALL PIPES SHALL CONFORM TO ASTM A53, GRADE B (F_y = 35KSI)

E. ALL THRU BOLTS SHALL CONFORM TO ASTM A307 (F_U = 60 KSI).

F. ALL NUTS SHALL CONFORM TO ASTM A563. ALL WASHERS SHALL CONFORM TO ASTM F436.

G. ALL SHOP WELDS SHALL BE PERFORMED BY CERTIFIED WELDERS AND CONFORM TO THE AMERICAN WELDING SOCIETY CODE FOR BUILDINGS ANS D1.1. WELDS SHALL DEVELOP THE FULL STRENGTH OF MATERIALS BEING WELDED UNLESS OTHERWISE INDICATED.

H. AN INDEPENDENT INSPECTION AGENCY SHALL INSPECT ALL STRUCTURAL STEEL AND VERIFY THAT IT CONFORMS TO THE REQUIREMENTS OF THE CONTRACT DOCUMENTS. FIELD INSPECTION REPORTS SHALL BE SUBMITTED TO THE ENGINEER WITHIN 5 DAYS OF THE INSPECTION. THE CONTRACTOR SHALL NOTIFY THE INSPECTION AGENCY OF ALL PHASES OF STEEL CONSTRUCTION AND WELDING.

I. STEEL MEMBERS, FABRICATIONS AND ASSEMBLIES EXPOSED TO WEATHER OR INDICATED TO BE GALVANIZED SHALL BE HOT DIPPED GALVANIZED IN ACCORDANCE WITH ASTM A123 AFTER FABRICATION. ALL BOLTS, SCREWS, WASHERS & NUTS SHALL BE HOT-DIPPED GALVANIZED IN ACCORDANCE WITH ASTM F2329.

J. PROVIDE HOLES IN STEEL AS REQUIRED TO PREVENT ANY ACCUMULATION OF WATER. ALL PENETRATIONS THROUGH MAIN MEMBERS SHALL NOT EXCEED 1-1/8" DIA. AND SHALL BE GROUND SMOOTH. THESE DRAINS MUST BE KEPT CLEAN AND OPEN.

K. THE CONTRACTOR SHALL SUBMIT SHOP DRAWINGS INDICATING THE SIZES, EXTENT, AND LOCATION OF ALL STRUCTURAL AND MISCELLANEOUS STEEL FRAMING INCLUDING ALL CONNECTIONS, FASTENERS, AND BEARINGS.

L. SHOW ALL COPES, HOLES, OPENINGS AND MODIFICATIONS REQUIRED IN STRUCTURAL STEEL MEMBERS FOR ERECTION OR THE WORK OF OTHER TRADES ON THE SHOP DRAWINGS FOR APPROVAL BY THE STRUCTURAL ENGINEER.

DOMINION NOTES:

A. A 9"X11" RF NOTICE SIGN MUST BE INSTALLED ON BOTH SIDES OF THE POLE A MINIMUM OF ONE FOOT ABOVE THE UPPERMOST ELECTRIC SUPPLY FACILITIES. THIS SIGN MARKS THE POINT WHERE RF EXPOSURE LEVELS MAY EXCEED "FCC OET-65 APPENDIX A" LIMITS FOR UNCONTROLLED GENERAL POPULATION EXPOSURE. WORKING ABOVE THIS POINT REQUIRES DE-ENERGIZING THE ANTENNA. THIS SIGN MUST INCLUDE THE STANDARD RF SYMBOL AND STATE "NON RF WORKERS MUST POWER DOWN DEVICE WHEN WORKING ABOVE THIS POINT." THE SIGN SHALL BE 60 MIL LEXAN WITH U.V. INHIBITORS AND SIGNS SHALL ADHERE TO IEEE C45.2 STANDARDS.

B. A POWER DISCONNECT MUST BE INSTALLED. THIS DEVICE MUST PROVIDE DISCONNECTING MEANS FOR DE-ENERGIZING AC AND DC (BATTERY BACK UP) POWER TO THE ANTENNA. THE DISCONNECT SHOULD BE A STANDARD NEMA TYPE HINGED ENCLOSURE AND IS SUBJECT TO COMPANY APPROVAL. THE DISCONNECT SHALL BE CLEARLY LABELED AS THE ANTENNA POWER DISCONNECT.

C. AN ADDITIONAL RF LABEL ON THE EQUIPMENT MUST INCLUDE COMMUNICATION COMPANY NAME, AND A 24-HR CONTACT PHONE NUMBER. THE LABEL SHALL ADHERE TO IEEE C45.2 STANDARDS.

D. THE ANTENNA SHALL BE MOUNTED THE GREATER VALUE OF NESC MINIMUM CLEARANCE OR THE MINIMUM CLEARANCE REQUIRED TO MEET OET UNCONTROLLED EXPOSURE GUIDELINES AT A POINT 1' ABOVE THE ELECTRIC FACILITIES. THE ANTENNA INCLUDING ATTACHING HARDWARE SHALL BE MOUNTED A MINIMUM OF 45" ABOVE PRIMARY INSTALLATIONS AND 40" ABOVE SECONDARY INSTALLATIONS. (NESC TABLE 238-1)

E. ANTENNA EQUIPMENT IS PERMISSIBLE ON WOOD POLES ONLY.

F. ONLY NON METALLIC ELECTRIC GRADE CONDUIT OR RISERS CAN BE USED FOR ROUTING THE COMMUNICATION CABLES THROUGH THE SUPPLY SPACE. THE CONDUIT INSTALLATION SHALL NOT OBSTRUCT THE CLIMBING SPACE OR WORKING SPACE ON THE POLE AND SHALL NOT OBSTRUCT SUPPLY EQUIPMENT. (NESC 238B, AND NESC 238H4).

G. THE INSTALLATION MUST MEET ALL NESC REQUIREMENTS.

H. A DOMINION DISTRIBUTION REPRESENTATIVE MUST APPROVE ALL ANTENNA ATTACHMENT POLES. ANTENNAS ARE NOT ALLOWED ON POLES FREQUENTLY VISITED BY OPERATIONS PERSONNEL. THESE INCLUDE EQUIPMENT POLES SUCH AS RECLOSERS, THREE PHASE TRANSFORMER BANKS, THREE PHASE TERMINALS, CAPACITORS, SWITCHES, ETC.

I. INSTALLERS WORKING IN THE AREA OF THE POLE ABOVE THE NORMAL COMMUNICATIONS SPACE MUST MEET OSHA 1910.269 REQUIREMENTS.

J. AN ANTENNA GROUND WIRE AND GROUNDING ELECTRODE IS REQUIRED. THIS GROUND SHALL BE BONDED TO THE COMPANY GROUND WIRE.

K. VERIZON TO LEAVE MINIMUM 3' LEADS COILED AND SECURED TO PREVENT ACCIDENTAL CONTACT WITH SECONDARY CONDUCTORS.

L. SERVICE WILL BE CONNECTED BY VERIZON IN COMPLIANCE WITH FILED RATE PLAN.

M. LINE ARRESTER INSTALLATIONS ARE REQUIRED ON POLES WITH PRIMARY CONDUCTORS.

N. VERIZON'S GROUND MAY NOT BE USED TO SATISFY NEC REQUIREMENTS FOR THE EQUIPMENT BRACKET AC SERVICE GROUND. THE EQUIPMENT AND ITS AC SERVICE GROUND ARE REQUIRED TO BE BONDED TO THE COMPANY GROUND CONDUCTOR ON THE POLE AT LEAST 6" ABOVE GROUND LEVEL USING A NO. 6 CU CONDUCTOR. CONNECTION TO THE COMPANY'S GROUND ROD OR CONNECTOR IS NOT APPROVED.

O. BONDS SHALL BE MADE BETWEEN THE GROUND WIRE AND THE EQUIPMENT CABINET (NOT NEUTRAL BUS) OF THE POWER SUPPLY/SWITCH. THESE CONNECTIONS ARE TO AVOID POTENTIAL DIFFERENCES BETWEEN DEVICES ON THE POLES. BOND TO THE POWER SUPPLY/SWITCH SHALL BE EXTERNAL AND VISIBLE FROM THE GROUND. WHEN A COMPANY DRIVEN GROUND EXISTS ON THE POLE, THE EQUIPMENT CASE BONDING WIRE NEED EXTEND ONLY FROM THE SWITCH TO THE COMPANY GROUND WIRE.

P. THE METER BASE, EQUIPMENT BRACKET, AND DISCONNECT SHOULD BE MOUNTED PROVIDING EIGHT FEET MINIMUM GROUND CLEARANCE. THEY MAY BE MOUNTED AT OPERATIONAL HEIGHT THAT:
   1. THE EQUIPMENT BRACKET DOES NOT OBSTRUCT A WALKWAY OR IS SUBJECT TO VEHICULAR TRAFFIC.
   2. THE EQUIPMENT BRACKET CAN NOT BE USED ALONE OR IN CONJUNCTION WITH A FENCE, PEDESTAL, ETC. AS A CLIMBING AID.

Q. FOR SAFETY PURPOSES DEVICES WITH LEAD ACID BATTERIES SHALL NOT BE USED.

R. DUE TO OPERATIONAL CONCERNS, SECONDARY POLES OR GUY STUB POLES ARE PREFERRED FOR ANTENNA ATTACHMENTS. PRIMARY POLES SHOULD ONLY BE CONSIDERED WHEN THERE IS NO OTHER SUITABLE POLE IN THE AREA.

S. 60 WATT REMOTE RADIO HEAD (RRH) CAN BE SUBSTITUTED FOR THE 90 WATT RRH AS NEEDED.

T. THE WEATHERHEAD WILL BE INSTALLED 4" ABOVE THE NEUTRAL.

POST-INSTALLATION INSPECTION

A. A POST-INSTALLATION INSPECTION REPORT IS REQUIRED AND SHALL BE INCLUDED IN THE CONTRACTOR'S BID. A POST-INSTALLATION INSPECTION IS A VISUAL INSPECTION OF TOWER INSTALLATIONS AND A REVIEW OF CONSTRUCTION INSPECTIONS AND OTHER REPORTS TO ENSURE THE INSTALLATION WAS CONSTRUCTED IN ACCORDANCE WITH THE CONTRACT DOCUMENTS, NAMELY THE INSTALLATION DRAWINGS.

B. THE POST-INSTALLATION INSPECTION REPORT SHALL BE COMPLETED BY A PROFESSIONAL ENGINEER LICENSED IN THE JURISDICTION IN WHICH THE PROJECT IS LOCATED.

C. THE INTENT OF THE POST-INSTALLATION INSPECTION REPORT IS TO CONFIRM INSTALLATION AND CONFIGURATION AND WORKMANSHIP ONLY AND IS NOT A REVIEW OF THE INSTALLATION DESIGN ITSELF.

D. TO ENSURE THAT THE REQUIREMENTS OF THE POST-INSTALLATION INSPECTION REPORT ARE MET, IT IS VITAL THAT THE CONTRACTOR AND POST-INSTALLATION INSPECTOR BEGIN COMMUNICATING AND COORDINATING AS SOON AS A PO IS RECEIVED.

811

Know what's **below.**
Call before you dig.

PROTECT YOURSELF, GIVE THREE WORKING DAYS NOTICE

THIS DRAWING DOES NOT INCLUDE NECESSARY COMPONENTS FOR CONSTRUCTION SAFETY. ALL CONSTRUCTION MUST BE DONE IN COMPLIANCE WITH THE OCCUPATIONAL SAFETY AND HEALTH ACT OF 1970 AND ALL RULES AND REGULATIONS THERE TO APPURTENANT.

MRA
MORRIS & RITCHIE ASSOCIATES, INC.
Civil / Structural Engineers
1220-C East Joppa Road, Suite 505
Towson, Maryland 21286
410-821-1690
410-821-1746 Fax

verizon
OLD TOWN 3 - SMALL CELL
SOUTH ROYAL STREET ROW ADJACENT TO 411 GIBBONS STREET
ALEXANDRIA, VIRGINIA 22314 (CITY OF ALEXANDRIA)

REVISIONS:

NO.	DESCRIPTION	DATE
	PERMIT DWGS	01/22/20

DESIGNED BY:	RJD
DRAWN BY:	JCW
PROJECT NO:	10427.2841
DATE:	01/17/2020
SCALE:	AS NOTED

TITLE:

General Notes

SHEET:

S-2

ELECTRICAL SPECIFICATIONS

1. SECTION 16010 - BASIC ELECTRICAL REQUIREMENTS

   A. THE WORK INCLUDES FURNISHING AND INSTALLING THE MATERIAL, EQUIPMENT AND SYSTEMS COMPLETE AS SPECIFIED AND/OR INDICATED ON THE DRAWINGS. THE ELECTRICAL INSTALLATIONS, WHEN FINISHED, SHALL BE COMPLETE AND COORDINATED AND READY FOR SATISFACTORY SERVICE.

   B. ALL WORK UNDER THIS CONTRACT SHALL BE DONE IN STRICT ACCORDANCE WITH ALL APPLICABLE MUNICIPAL, STATE, BOCA, AND LOCAL ELECTRICAL CODES THAT GOVERN EACH PARTICULAR TRADE AND THE 2014 NATIONAL ELECTRICAL CODE.

   C. THE CONTRACTOR SHALL COORDINATE THE ELECTRICAL EQUIPMENT INSTALLATION WITH ALL TRADES.

   D. THE CONTRACTOR SHALL MAKE APPLICATION AND PAY ALL CHARGES FOR ALL NECESSARY PERMITS, LICENSES, AND INSPECTIONS AS REQUIRED UNDER THE ABOVE CODES. UPON COMPLETION OF THE WORK, THE CUSTOMARY CERTIFICATIONS OF APPROVAL SHALL BE FURNISHED.

   E. NO MATERIALS OR EQUIPMENT SHALL BE USED IN THE WORK UNTIL APPROVED. ALL MATERIALS SHALL BE U.L. LISTED.

   F. THE CONTRACTOR SHALL EXAMINE ALL DRAWINGS AND SHALL INSPECT THE EXISTING CONDITIONS OF THE SITE. FAILURE TO COMPLY WITH THIS REQUIREMENT WILL NOT RELIEVE THE CONTRACTOR OF RESPONSIBILITY FOR COMPLYING WITH THE CONTRACT DOCUMENTS.

   G. THE DRAWINGS INDICATE THE GENERAL ARRANGEMENT OF THE ELECTRICAL INSTALLATIONS. DETAILS OF PROPOSED DEPARTURES DUE TO ACTUAL FIELD CONDITIONS OR OTHER CAUSES SHALL BE SUBMITTED FOR APPROVAL PRIOR TO INSTALLATION. REWORK OF COMPLETED ITEMS DUE TO IMPROPER FIELD COORDINATION SHALL BE AT THE CONTRACTOR'S EXPENSE.

   H. PROVIDE SUFFICIENT ACCESS AND CLEARANCE FOR ALL ITEMS OF EQUIPMENT REQUIRING SERVICING AND MAINTENANCE.

   I. THE CONTRACTOR SHALL PERFORM ALL NECESSARY CUTTING AND PATCHING AS REQUIRED TO COMPLETE THE INSTALLATIONS. PATCHING OF WALLS, FLOORS, CEILINGS, ETC. SHALL MATCH THE ADJACENT SURFACES.

   J. UPON COMPLETION OF THE ELECTRICAL INSTALLATION, THE CONTRACTOR SHALL PROVIDE A COMPLETE SET OF PRINTS OF THE ELECTRICAL CONTRACT DRAWINGS WHICH SHALL BE LEGIBLY MARKED IN RED TO SHOW ALL CHANGES AND DEPARTURES OF THE INSTALLATIONS COMPARED WITH THE ORIGINAL DESIGN. THEY SHALL BE SUITABLE FOR USE IN PREPARATION OF RECORD DRAWINGS.

   K. GUARANTEE: ALL NEW ELECTRICAL INSTALLATIONS SHALL BE GUARANTEED FOR A PERIOD OF ONE (1) YEAR BEGINNING THE DAY OF THE FINAL ACCEPTANCE OF THE WORK OR BENEFICIAL OCCUPANCY OF THE OWNER, WHICHEVER OCCURS FIRST. THE ABOVE SHALL NOT IN ANY WAY VOID OR ABBROGATE EQUIPMENT MANUFACTURER'S GUARANTEE OR WARRANTY. CERTIFICATES OF GUARANTEE SHALL BE DELIVERED TO THE OWNER. UPON RECEIPT OF NOTICE FROM THE OWNER OF FAILURE OF ANY PART OF THE ELECTRICAL INSTALLATION DURING THE GUARANTEE PERIOD, NEW REPLACEMENT PARTS SHALL BE FURNISHED AND INSTALLED PROMPTLY AND AT NO COST TO VERIZON.

   L. ANY ELECTRICAL WORK WHICH WILL INTERFERE WITH THE NORMAL OPERATION OF THE STREET LIGHT SHALL BE DONE AT SUCH TIME OR TIMES AS SHALL BE MUTUALLY AGREED UPON BETWEEN THE CONTRACTOR AND THE BGE/BALTIMORE CITY REPRESENTATIVE.

   M. SUPPORTS, HANGERS, AND FOUNDATIONS: PROVIDE ALL SUPPORTS, HANGERS, BRACES, ATTACHMENTS, AND FOUNDATIONS REQUIRED FOR THE WORK. SUPPORT AND SET THE WORK IN A THOROUGHLY SUBSTANTIAL AND WORKMANLIKE MANNER WITHOUT PLACING STRAINS ON THE MATERIALS, EQUIPMENT, OR THE BUILDING STRUCTURE. SUPPORTS, HANGERS, BRACES AND ATTACHMENTS SHALL BE STANDARD MANUFACTURED ITEMS OR FABRICATED STRUCTURAL STEEL SHAPES.

   N. THERE SHALL BE NO INTERRUPTION OF POWER TO EXISTING ELECTRICAL SYSTEMS WITHOUT PRIOR CONSENT FROM VERIZON. SUCH INTERRUPTIONS SHALL BE KEPT TO A MINIMUM AND SHALL BE SCHEDULED WITH THE OWNER AT LEAST THREE BUSINESS DAYS IN ADVANCE OF THE OUTAGE. ANY COST FOR WORK THAT MUST BE DONE ON AN OVERTIME BASIS SHALL BE INCLUDED IN THE BID.

   O. MOUNTING AND SUPPORTING OF ALL EQUIPMENT PROVIDED BY THIS CONTRACTOR SHALL BE COORDINATED WITH VERIZON IN THE FIELD.

   P. PROVIDE ALL CUTTING AND PATCHING NECESSARY FOR THE INSTALLATION OF THE ELECTRICAL WORK. ANY DAMAGE DONE TO THE WORK ALREADY IN PLACE BY REASON OF THIS WORK SHALL BE REPAIRED AT THE CONTRACTOR'S EXPENSE BY A QUALIFIED MECHANIC EXPERIENCED IN SUCH WORK. PATCHING SHALL BE UNIFORM IN APPEARANCE AND SHALL MATCH THE SURROUNDING SURFACE. ALL PENETRATIONS THROUGH WALLS OF NEW ROOM SHALL BE SEALED WEATHERTIGHT.

2. SECTION 16050 - BASIC ELECTRICAL MATERIALS & METHODS

   A. CONDUIT & BOXES:

      1. ALL CONDUIT BELOW GRADE SHALL BE SCHEDULE 40 PVC. ALL CONDUIT ABOVE GRADE SHALL BE NON METALLIC ELECTRIC GRADE.

      2. JUNCTION AND PULL BOXES SHALL BE FURNISHED AND INSTALLED AS SHOWN OR WHERE REQUIRED TO FACILITATE PULLING OF WIRES OR CABLES. SUCH BOXES SHALL BE INSTALLED IN ACCESSIBLE LOCATIONS. GASKETED COVER PLATES SHALL BE FURNISHED FOR OUTDOOR INSTALLATIONS.

      3. ALL BOXES, WHETHER OUTLET, JUNCTION, PULL, OR EQUIPMENT SHALL BE FURNISHED WITH APPROPRIATE COVERS.

      4. NO SECTIONALIZED BOXES SHALL BE USED.

      5. ALL EMT CONDUIT FITTINGS SHALL BE COMPRESSION TYPE.

      6. ALL FIELD CUTS OF GALVANIZED ITEMS SHALL BE BRUSHED WITH MARINE GRADE GALVANIZING.

      7. ALL METALLIC OBJECTS EXPOSED TO WEATHER SHALL BE GALVANIZED.

   B. WIRES & CABLE:

      1. BUILDING WIRE, UNLESS OTHERWISE INDICATED, SHALL BE 600 VOLT, TYPE THWN INSULATION FOR INTERIOR AND EXTERIOR USE. CONDUCTORS SHALL BE SOFT DRAWN COPPER OF NOT LESS THAN 98% CONDUCTIVITY. NO ROMEX OR AC (BX) CABLE WILL BE ALLOWED ON THE PROJECT.

      2. NO WIRE SMALLER THAN NO. TWELVE (12) AWG SHALL BE USED UNLESS OTHERWISE INDICATED. CONDUCTORS SHALL BE CONTINUOUS FROM OUTLET TO OUTLET AND FROM TERMINAL BOARD TO POINT OF FINAL CONNECTION, AND NO SPLICE SHALL BE MADE EXCEPT WITHIN OUTLET OR JUNCTION BOXES. ALL CONDUCTORS SHALL BE OF THE SIZES AS INDICATED. ALL WIRES NO. EIGHT (8) AWG AND LARGER SHALL BE STRANDED. THE CONTRACTOR SHALL MAKE WIRING CONNECTIONS OF ALL ELECTRICAL EQUIPMENT REQUIRING ELECTRICAL SERVICE. WIRES AND CABLES SHALL BE AS MANUFACTURED BY PIRELLI, ROYAL, AND TRIANGLE OR EQUIVALENT.

      3. ALL WIRING SHALL BE COLOR CODED. MATCH EXISTING SYSTEM COLOR CODING WHERE APPLICABLE.

   C. DISCONNECTS:

      1. FURNISH AND INSTALL SAFETY SWITCHES WHERE INDICATED AND AS REQUIRED FOR MOTOR OUTLETS OR OTHER EQUIPMENT. SWITCHES SHALL BE OF SIZE, NUMBER OF POLES AND FUSED OR NON-FUSED, AS REQUIRED FOR JOB CONDITIONS AND THE NATIONAL ELECTRICAL CODE.

   D. GROUNDING:

      1. PROVIDE GROUND FOR ALL RACEWAYS, DEVICES, AND UTILIZATION EQUIPMENT PERMANENTLY AND EFFECTIVELY IN ACCORDANCE WITH THE NATIONAL ELECTRICAL CODE, AS HERINAFTER SPECIFIED. ALL GROUNDING AND BONDING CONNECTIONS SHALL BE SOLDERLESS.

      2. PROVIDE INSULATED GROUNDING CONDUCTORS FOR FEEDER AND BRANCH CIRCUIT WIRING AS CALLED FOR ON THE PLANS. PROVIDE GROUNDING BLOCKS, TERMINALS, ETC., FOR CONNECTION OF GROUND WIRE IN ALL DISTRIBUTION EQUIPMENT.

3. SECTION 16400 - SERVICE & DISTRIBUTION

   A. ELECTRICAL SERVICE:

      1. ELECTRICAL POWER TO THE NEW EQUIPMENT SHALL BE EXTENDED FROM THE PROPOSED UTILITY METER AND SERVICE ENTRANCE RATED LOAD CENTER PANEL MOUNTED ON NEW POLE. LABEL METER WITH PHENOLIC NAMEPLATE READING "VERIZON WIRELESS". LABEL PANEL WITH PHENOLIC NAMEPLATE READING "VERIZON WIRELESS SERVICE DISCONNECT".

   B. COMMUNICATIONS SERVICE:

      1. TELEPHONE SERVICE SHALL BE EXTENDED BY THE TELEPHONE COMPANY. PROVIDE SERVICE CONDUITS, BACKBOARDS, SLEEVES, AND OTHER EQUIPMENT SHOWN ON THE DRAWINGS FOR USE BY THE TELEPHONE COMPANY. ALL CHARGES BY THE UTILITY COMPANY SHALL BE PAID BY THE OWNER.

      2. ALL ELBOWS IN CONDUIT RUNS SHALL BE WIDE SWEEP FIELD BENDS. INSTALL PULL BOXES AS REQUIRED AND WHERE DIRECTED BY THE TELEPHONE COMPANY AND/OR AS REQUIRED BY THE NATIONAL ELECTRICAL CODE.

ELECTRICAL SYMBOLS LIST

NOTE: ALL MOUNTING HEIGHTS ARE TO CENTER LINE OF THE OUTLET BOX UNLESS OTHERWISE INDICATED.

	120/240V, 1Φ, SQUARE D LOAD CENTER
(5)	DRAWING NOTE
—E—	ELECTRIC FEEDERS
—T—	TELEPHONE SERVICE
	BRANCH CIRCUIT
M	METER
	GROUND CONDUCTOR
R	BURIED GROUND ROD
▼	DESIGNATES FRONT

DETAIL - SQUARE-D Q0816L100RB

NOT TO SCALE (OR APPROVED EQUAL)

* PHENOLIC NAMEPLATE SHALL HAVE A BLACK BACKGROUND WITH WHITE LETTERING AND BE PERMANENTLY INSTALLED ON FRONT OF LOAD CENTER PANEL.

DETAIL - LOAD CENTER PLACARD

NO SCALE

(PROPOSED) (NEMA 3R)

PANEL "VERIZON WIRELESS"

120/240 VOLTS 1Φ 3 WIRE 100 AMP MAIN L.O.

CKT	1	2	3	4	5	6	7	8
BRKR	40		15	15	15	15	15	-	-	-
DESCRIPTION	MAIN		NOKIA RADIO UNIT #1 ASODA #1	NOKIA RADIO UNIT #2 ASODA #2	NOKIA RADIO UNIT #3 ASODA #3	SPACE	SPACE	SPACE

POWER LOAD: 2.7 KVA x 125% = 3.37 KVA
= 14.07 AMPS
@ 120/240V, 1Φ, 3W

* PANEL SHALL BE LOCKABLE WITH PADLOCK.

** PANEL SHALL BE SERVICE ENTRANCE RATED.

*** PANELBOARD SHALL BE EQUIPPED WITH A TYPEWRITTEN DIRECTORY, INDICATING PLAINLY WHAT EACH CIRCUIT OF THE PANEL CONTROLS. THIS SCHEDULE SHALL BE PLACED ON FRONT COVER OF PANEL.

**** CONTRACTOR SHALL PROVIDE AND INSTALL 15AMP TANDEM BREAKERS IN SPACE #3, #4 AND #5 AS SHOWN.

DOMINION SPECIFCATIONS

1. A 9"X11" RF NOTICE SIGN MUST BE INSTALLED ON BOTH SIDES OF THE POLE A MINIMUM OF ONE FOOT ABOVE THE UPPERMOST ELECTRIC SUPPLY FACILITIES. THIS SIGN MARKS THE POINT WHERE RF EXPOSURE LEVELS MAY EXCEED "FCC OET-65 APPENDIX A" LIMITS FOR UNCONTROLLED GENERAL POPULATION EXPOSURE. WORKING ABOVE THIS POINT REQUIRES DE-ENERGIZING THE ANTENNA. THIS SIGN MUST INCLUDE THE STANDARD RF SYMBOL AND STATE "NON RF WORKERS MUST POWER DOWN DEVICE WHEN WORKING ABOVE THIS POINT." THE SIGN SHALL BE 60 MIL LEXAN WITH U.V. INHIBITORS AND SIGNS SHALL ADHERE TO IEEE C95.2 STANDARDS.

2. A POWER DISCONNECT MUST BE INSTALLED. THIS DEVICE MUST PROVIDE DISCONNECTING MEANS FOR DE-ENERGIZING AC AND DC (BATTERY BACK UP) POWER TO THE ANTENNA. THE DISCONNECT SHOULD BE A STANDARD NEMA TYPE HINGED ENCLOSURE AND IS SUBJECT TO COMPANY APPROVAL. THE DISCONNECT SHALL BE CLEARLY LABELED AS THE ANTENNA POWER DISCONNECT.

3. AN ADDITIONAL RF LABEL ON THE EQUIPMENT MUST INCLUDE COMMUNICATION COMPANY NAME, AND A 24-HR CONTACT PHONE NUMBER. THE LABEL SHALL ADHERE TO IEEE C95.2 STANDARDS.

4. THE ANTENNA SHALL BE MOUNTED THE GREATER VALUE OF NESC MINIMUM CLEARANCE OR THE MINIMUM CLEARANCE REQUIRED TO MEET OET UNCONTROLLED EXPOSURE GUIDELINES AT A POINT 1' ABOVE THE ELECTRIC FACILITIES. THE ANTENNA INCLUDING ATTACHING HARDWARE SHALL BE MOUNTED A MINIMUM OF 45" ABOVE PRIMARY INSTALLATIONS AND 40" ABOVE SECONDARY INSTALLATIONS. (NESC TABLE 238-1)

5. ANTENNA EQUIPMENT IS PERMISSIBLE ON WOOD POLES ONLY.

6. ONLY NON METALLIC ELECTRIC GRADE CONDUIT OR RISERS CAN BE USED FOR ROUTING THE COMMUNICATION CABLES THROUGH THE SUPPLY SPACE. THE CONDUIT INSTALLATION SHALL NOT OBSTRUCT THE CLIMBING SPACE OR WORKING SPACE ON THE POLE AND SHALL NOT OBSTRUCT SUPPLY EQUIPMENT. (NESC 239B, AND NESC 239H4).

7. THE INSTALLATION MUST MEET ALL NESC REQUIREMENTS.

8. A DOMINION DISTRIBUTION REPRESENTATIVE MUST APPROVE ALL ANTENNA ATTACHMENT POLES. ANTENNAS ARE NOT ALLOWED ON POLES FREQUENTLY VISITED BY OPERATIONS PERSONNEL. THESE INCLUDE EQUIPMENT POLES SUCH AS RECLOSERS, THREE PHASE TRANSFORMER BANKS, THREE PHASE TERMINALS, CAPACITORS, SWITCHES, ETC.

9. INSTALLERS WORKING IN THE AREA OF THE POLE ABOVE THE NORMAL COMMUNICATIONS SPACE MUST MEET OSHA 1910.269 REQUIREMENTS.

10. AN ANTENNA GROUND WIRE AND GROUNDING ELECTRODE IS REQUIRED. THIS GROUND SHALL BE BONDED TO THE COMPANY GROUND WIRE.

11. VERIZON TO LEAVE MINIMUM 3' LEADS COILED AND SECURED TO PREVENT ACCIDENTAL CONTACT WITH SECONDARY CONDUCTORS.

12. SERVICE WILL BE CONNECTED BY VERIZON IN COMPLIANCE WITH FILED RATE PLAN.

13. LINE ARRESTER INSTALLATIONS ARE REQUIRED ON POLES WITH PRIMARY CONDUCTORS.

14. VERIZON'S GROUND MAY NOT BE USED TO SATISFY NEC REQUIREMENTS FOR THE EQUIPMENT BRACKET AC SERVICE GROUND. THE EQUIPMENT AND ITS AC SERVICE GROUND ARE REQUIRED TO BE BONDED TO THE COMPANY GROUND CONDUCTOR ON THE POLE AT LEAST 6" ABOVE GROUND LEVEL USING A No. 6 CU CONDUCTOR. CONNECTION TO THE COMPANY'S GROUND ROD OR CONNECTOR IS NOT APPROVED.

15. BONDS SHALL BE MADE BETWEEN THE GROUND WIRE AND THE EQUIPMENT CABINET (NOT NEUTRAL BUS) OF THE POWER SUPPLY/SWITCH. THESE CONNECTIONS ARE TO AVOID POTENTIAL DIFFERENCES BETWEEN DEVICES ON THE POLES. BOND TO THE POWER SUPPLY/SWITCH SHALL BE EXTERNAL AND VISIBLE FROM THE GROUND. WHEN A COMPANY DRIVEN GROUND EXISTS ON THE POLE, THE EQUIPMENT CASE BONDING WIRE NEED EXTEND ONLY FROM THE SWITCH TO THE COMPANY GROUND WIRE.

16. THE METER BASE, EQUIPMENT BRACKET, AND DISCONNECT SHOULD BE MOUNTED PROVIDING EIGHT FEET MINIMUM GROUND CLEARANCE. THEY MAY BE MOUNTED AT OPERATIONAL HEIGHT THAT:
    A. THE EQUIPMENT BRACKET DOES NOT OBSTRUCT A WALKWAY OR IS SUBJECT TO VEHICULAR TRAFFIC.
    B. THE EQUIPMENT BRACKET CAN NOT BE USED ALONE OR IN CONJUNCTION WITH A FENCE, PEDESTAL, ETC. AS A CLIMBING AID.

17. FOR SAFETY PURPOSES DEVICES WITH LEAD ACID BATTERIES SHALL NOT BE USED.

18. DUE TO OPERATIONAL CONCERNS, SECONDARY POLES OR GUY STUB POLES ARE PREFERRED FOR ANTENNA ATTACHMENTS. PRIMARY POLES SHOULD ONLY BE CONSIDERED WHEN THERE IS NO OTHER SUITABLE POLE IN THE AREA.

19. ONE RADIO CABINET, A SERVICE DISCONNECT AND THE METER BASE MAY BE POLE MOUNTED. ADDITIONAL EQUIPMENT, OR LARGE CABINETS SHALL BE PAD MOUNTED. PAD MOUNTED EQUIPMENT MUST BE LOCATED A MINIMUM OF 10' FROM THE BASE OF THE POLE.

TEI
TELEGENT ENGINEERING INC.
2216 Commerce Road, Suite 1
Forest Hill, MD 21050
410-692-5816
www.tel-eng.com

COMMONWEALTH OF VIRGINIA
TIMOTHY JOHN SMIDT
No. 025520
PROFESSIONAL ENGINEER

verizon
OLD TOWN 3 - SMALL CELL
SOUTH ROYAL STREET ROW ADJACENT TO 411 GIBBONS STREET, ALEXANDRIA
CITY OF ALEXANDRIA, VIRGINIA 22314

REVISIONS:

NO.	DESCRIPTION	DATE
	PERMIT DWGS.	1/22/20

LAST REV.:
PROJECT NO: 19154B
DATE: JANUARY 22, 2020
SCALE: AS NOTED
TITLE: SPECIFICATIONS, SYMBOLS LIST, PANEL SCHEDULE AND DETAILS
SHEET: E-1

TEI#19154B

EQUIPMENT SCHEDULE

MANUFACTURER	PART #	COMPONENT TYPE	QUANTITY	DIMENSIONS (HxWxD)	WEIGHT
NOKIA	AIRSCALE AEUB & ASODA RRH	ANTENNA/ REMOTE RADIO HEAD	3	23.62"x11.97"x8.11"	68.2 LBS.
SQUARE-D	QO816L100RB	LOAD CENTER PANEL	1	12.64"x8.90"x4.27"	9.68 LBS.
MILBANK MFG. CO.	U7487-O	ELECTRIC METER	1	11.5"x8.0"x3.3"	3.98 LBS.
		CONDUIT CABLING	3±	VARIES	20.0 LBS.
				TOTAL WEIGHT:	101.86 LBS.
				TOTAL VOLUME:	4.45 CU.FT.

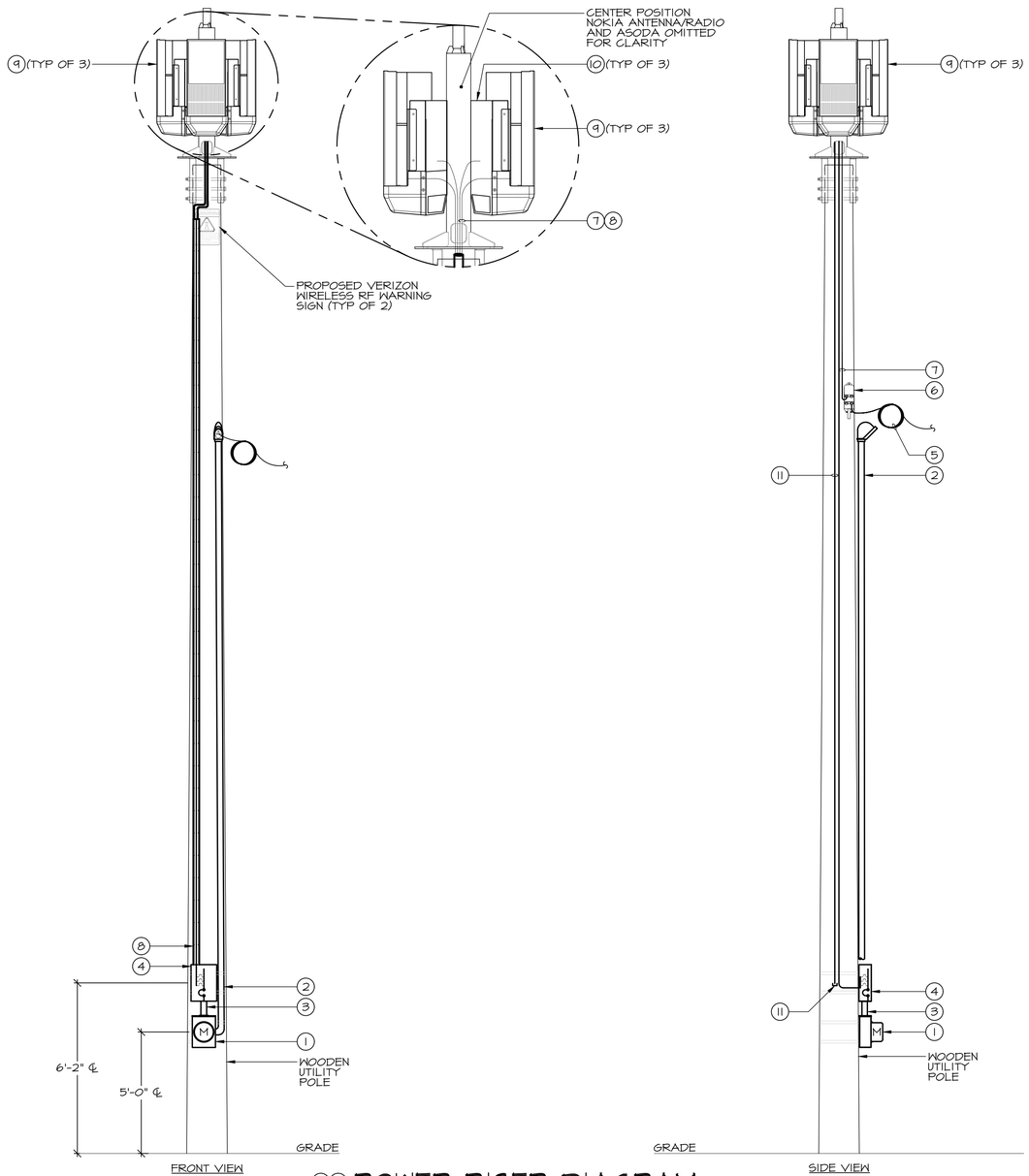

12 13 14 POWER RISER DIAGRAM
NO SCALE

DRAWING NOTES

1. PROPOSED UTILITY COMPANY METER CAN MOUNTED ON UTILITY POLE. NEW METER GLOBE PROVIDED AND INSTALLED BY UTILITY COMPANY. PROVIDE PHENOLIC NAMEPLATE READING "VERIZON WIRELESS".
2. EXTEND 3#1/0 AWG + #6 GRD IN ONE (1) - 2" PVC CONDUIT VERTICALLY UP UTILITY POLE FROM LINE SIDE OF METER CAN FOR EXTENSION OF OVERHEAD ELECTRIC SERVICE CABLES. COORDINATE FINAL CONDUIT TERMINATION POINT WITH UTILITY REPRESENTATIVE IN THE FIELD. PROVIDE WEATHER HEAD AT TOP END OF CONDUIT. CONTRACTOR SHALL TRANSITION TO FLEX PRIOR TO FINAL CONNECTION TO METER CAN. ELECTRICIAN SHALL ALLOW 3'-0" OF SLACK AT WEATHERHEAD AND METER FOR FINAL TERMINATIONS BY UTILITY COMPANY.
3. EXTEND 3#6 AWG + #8 GRD - 1" CONDUIT FROM METER UP TO PANEL.
4. PROVIDE AND INSTALL WEATHERPROOF SERVICE ENTRANCE RATED, 120/240 VOLT, 1Φ, 3W, 100 AMP M.L.O EIGHT (8) POSITION QO LOAD CENTER PANEL (MODEL #QO816L100RB) WITH FIELD INSTALLED 2P40A MAIN CIRCUIT BREAKER MOUNTED ABOVE METER CAN ON UTILITY POLE. PROVIDE PHENOLIC NAMEPLATE READING, "VERIZON WIRELESS SERVICE DISCONNECT". REFER TO PANEL SCHEDULE, SHEET E-1 FOR ADDITIONAL INFORMATION.
5. PROPOSED ROUTE OF INCOMING OVERHEAD FIBER CABLE BY UTILITY COMPANY. EXCESS FIBER SHALL BE COILED AND SECURED TO UTILITY POLE ABOVE ALL EQUIPMENT. COORDINATE FINAL INCOMING FIBER ROUTE WITH UTILITY COMPANY.
6. UTILITY COMPANY PROVIDED AND INSTALLED OPTISHEATH MULITPORT TERMINAL MOUNTED ON UTILITY POLE. EXACT MOUNTING LOCATION SHALL BE COORDINATED WITH VERIZON TELEPHONE IN FIELD.
7. EXTEND SIX (6) PAIR FIBER FROM PROPOSED OMNI-TAP TO SERVE ASODA RADIO UNITS MOUNTED ON UTILITY POLE.
8. EXTEND DAMP LOCATION RATED MC CABLE (4#12 AWG + #12 GRD) FROM EACH 15 AMP TANDEM BREAKER (TYP OF 3) VERTICALLY UP EXTERIOR OF UTILITY POLE IN RISER GUARD TO EACH NOKIA ANTENNA/ASODA UNIT MOUNTED ON UTILITY POLE (TYP OF 3). REFER TO PANEL SCHEDULE, SHEET E-1, FOR ADDITIONAL INFORMATION.
9. VERIZON WIRELESS PROVIDED, CONTRACTOR INSTALLED NOKIA ANTENNA/RADIO UNIT MOUNTED ON UTILITY POLE.
10. VERIZON WIRELESS PROVIDED AND CONTRACTOR INSTALLED NOKIA AIRSCALE CORE OUTDOOR 175W ASODA REMOTE RADIO HEAD MOUNTED BEHIND NOKIA ANTENNAS (TYP OF 3). REFER TO STRUCTURAL DRAWINGS FOR ADDITIONAL MOUNTING INFORMATION.
11. EXTEND ONE (1) WEATHERPROOF RATED CAT 5E CABLE FROM EACH ASODA AND COIL UP AT BASE OF LOAD CENTER. PROVIDE AND INSTALL RJ45 PLUG KIT WITH CAP TO KEEP CONNECTION WEATHERPROOF.
12. CONTRACTOR MUST REFER TO THE LATEST EDITION OF VERIZON WIRELESS FIBER DESIGN STANDARDS FOR FIBER QUANTITIES/ INTERCONNECTS.
13. REFER TO DRAWING PREPARED BY MRA FOR SITE PLAN.
14. VERIZON CONTRACTOR SHALL COORDINATE FINAL AVAILABLE SERVICE CHARACTERISTICS (VOLTAGE, PHASE, ETC.) WITH UTILITY COMPANY PRIOR TO START OF WORK. PREFERRED VOLTAGE IS: 120/240V, 1Φ, ACCEPTABLE VOLTAGE IS: 120/208V, 1Φ.

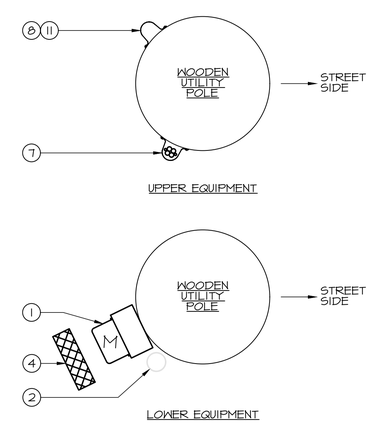

* COORDINATE FINAL MOUNTING LOCATION OF METER WITH UTILITY COMPANY REPRESENTATIVE PRIOR TO START OF WORK.

** CONTRACTOR TO COORDINATE THE FINAL PLACEMENT OF THE CABLE SHROUD AS INDICATED ON SHEET S-1.

12 13 14 EQUIPMENT PLAN
SCALE: 1" =1'-0"

0 1 2 3
SCALE: 1"=1'-0"

TEI
TELEGENT ENGINEERING INC.
2216 Commerce Road, Suite 1
Forest Hill, MD 21050
410-692-5816
www.tel-eng.com

COMMONWEALTH OF VIRGINIA
TIMOTHY JOHN SMIDT
No. 029520
PROFESSIONAL ENGINEER

verizon
OLD TOWN 3 - SMALL CELL
SOUTH ROYAL STREET ROW ADJACENT TO 411 GIBBONS STREET, ALEXANDRIA
CITY OF ALEXANDRIA, VIRGINIA 22314

REVISIONS:

NO.	DESCRIPTION	DATE
	PERMIT DWGS.	1/22/20

LAST REV.:
PROJECT NO: 19154B
DATE: JANUARY 22, 2020
SCALE: AS NOTED

TITLE:
POWER RISER DIAGRAM, EQUIPMENT PLAN AND NOTES

SHEET:
E-2

TEI#19154B

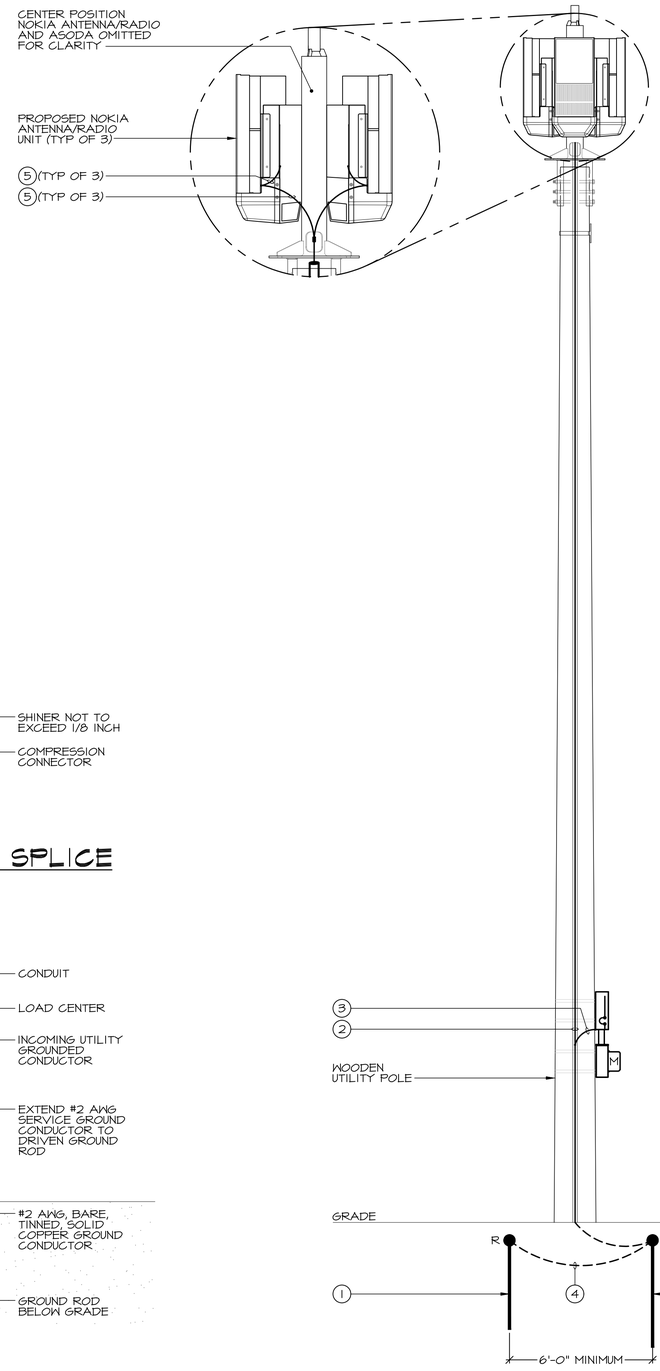

UTILITY POLE GROUNDING DIAGRAM
NO SCALE

GROUNDING GENERAL NOTES

1. ALL GROUND CONNECTIONS BELOW GRADE SHALL BE EXOTHERMIC (CADWELD)TO NEAREST REINFORCING BAR USING ERICO CADWELD "ONE-SHOT" CONNECTIONS.
2. ALL EXTERIOR GROUND CONDUCTORS SHALL BE #2 AWG BARE, TINNED SOLID COPPER, UNLESS NOTED OTHERWISE.
3. ALL GROUND CONNECTIONS ABOVE GRADE SHALL BE TWO-HOLE COPPER COMPRESSION TYPE WITH STANDARD LENGTH BARREL (BURNDY # YA2CL- 2TC14EI). SINGLE HOLE LUGS ARE NOT ACCEPTABLE.
4. ALL MOUNTING HARDWARE FOR EXTERIOR LOCATIONS SHALL BE GALVANIZED INCLUDING NUTS, BOLTS, FLAT AND LOCK WASHERS.
5. ALL EXTERIOR MECHANICAL CONNECTIONS SHALL BE MADE USING OXIDE-INHIBITING JOINT COMPOUND. THE COMPOUND SHALL BE APPLIED TO ALL SURFACES OF BOLTS, WASHERS, NUTS AND CONNECTING SURFACES OF GROUND BAR PLATES. ALL BARE COPPER SURFACES OF CONDUCTORS SHALL BE COATED PRIOR TO LUGGING. JOINT COMPOUND SHALL BE NO-OX.
6. TYPICAL BI-DIRECTIONAL BONDING CONNECTIONS TO THE INTERIOR GROUND RING SHALL BE MADE USING DOUBLE CRIMP TYPE "C" TAP CONNECTORS.
7. ALL EXOTHERMIC WELD CONNECTIONS AND FIELD CUTS OF METALLIC OBJECTS EXPOSED TO WEATHER SHALL BE FIRST SPRAYED WITH COLD GALVANIZING (AFTER COOL DOWN) THEN BE TOPPED WITH BRUSH ON MARINE GRADE GALVANIZING.
8. ALL CONDUIT USED AS SLEEVES FOR GROUNDING OR BONDING CONDUCTORS SHALL BE PVC.
9. ALL GROUND RODS SHALL BE DRIVEN VERTICALLY USING A GROUND ROD SHIELD TO PREVENT THE ENDS FROM "MUSHROOMING".
10. PROVIDE ANDREW 36" GROUNDING CABLE REQUIRING FIELD ATTACHABLE CRIMP-ON LUG. DO NOT USE THE LUGS PROVIDED WITH THE GROUNDING KIT; PROVIDE TWO HOLE LUGS. GROUNDING CABLE SHALL BE CUT TO SHORTEST LENGTH POSSIBLE. ALL BONDING CONNECTIONS TO THE EXTERIOR GROUND BAR PLATE SHALL BE MADE USING STAINLESS STEEL NUTS AND BOLTS. CORROSION INHIBITOR SHALL BE APPLIED BETWEEN NUTS AND BOLTS AND GROUND BAR PLATE.
11. **JOINT COMPOUND FOR GROUNDING SHALL BE NO-OX.**

DRAWING NOTES

1. PROVIDE 8'-0" (MINIMUM) X 5/8" COPPER CLAD STEEL GROUND ROD.
2. EXTEND 1#2 AWG, GREEN INSULATED, STRANDED COPPER GROUND CONDUCTOR FROM BURIED GROUND ROD VERTICALLY UP UTILITY POLE FOR GROUNDING OF EQUIPMENT/ANTENNAS. GROUND CONDUCTOR SHALL BE HOUSED WITHIN 1/2" GROUND WIRE MOLDING THEN TRANSITION AT ELEVATION OF HEAVY WALL, SCHEDULE 40 PV MOLDING (POLE RISER). SECURE GROUND WIRE MOLDING TO UTILITY POLE VIA GALVANIZED 2"X5/8" STAPLES. SECURE POLE RISER TO UTILITY POLE VIA GALVANIZED LAG BOLTS, REFER TO STRUCTURAL FOR DETAILS.
3. EXTEND 1#2 AWG, GREEN INSULATED, STRANDED COPPER GROUND CONDUCTOR FROM ENCLOSURE OF PROPOSED LOAD CENTER PANEL AND BOND TO GROUND CONDUCTOR EXTENDING TO BURIED GROUND ROD. REFER TO SERVICE GROUNDING DETAIL, THIS SHEET.
4. BURIED GROUND RING SHALL BE #2 AWG, BARE, TINNED, SOLID COPPER.
5. EXTEND 1#6 AWG, GREEN INSULATED, STRANDED COPPER GROUND CONDUCTOR FROM EACH NOKIA ANTENNA/RADIO UNIT/ASODA AND BOND TO GROUND PIGTAIL CONDUCTOR. EXTEND GROUND PIGTAIL AND BOND TO GROUND CONDUCTOR EXTENDING DOWN LIGHT POLE TO BURIED GROUND ROD. REFER TO DIRECTIONAL SPLICE DETAIL, THIS SHEET.

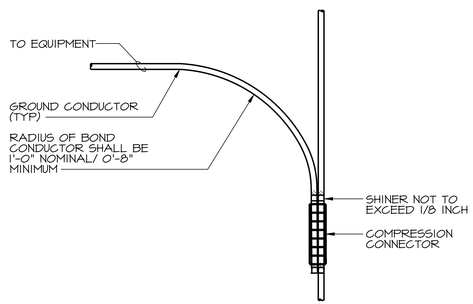

DETAIL - DIRECTIONAL SPLICE
NO SCALE

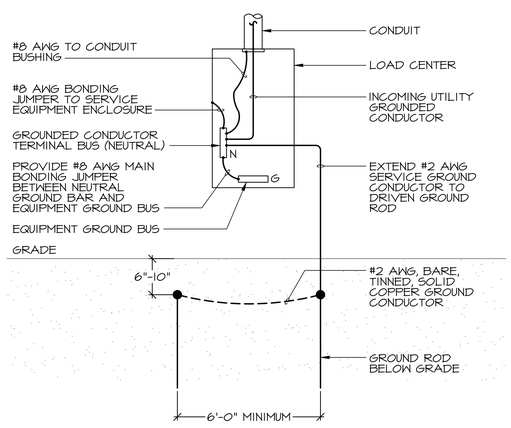

DETAIL - TYP. ELECTRIC SERVICE GROUNDING ELECTRODE
NO SCALE

TEI
TELEGENT ENGINEERING INC.
2216 Commerce Road, Suite 1
Forest Hill, MD 21050
410-692-5816
www.tel-eng.com

COMMONWEALTH OF VIRGINIA
TIMOTHY JOHN SMIDT
NO. 029520
PROFESSIONAL ENGINEER

verizon
OLD TOWN 3 - SMALL CELL
SOUTH ROYAL STREET ROW ADJACENT TO 411 GIBBONS STREET, ALEXANDRIA
CITY OF ALEXANDRIA, VIRGINIA 22314

REVISIONS:

NO.	DESCRIPTION	DATE
	PERMIT DWGS.	1/22/20

LAST REV.:
PROJECT NO: 19154B
DATE: JANUARY 22, 2020
SCALE: AS NOTED
TITLE: GROUNDING DIAGRAM, DETAILS AND NOTES
SHEET: E-3

TEI#19154B

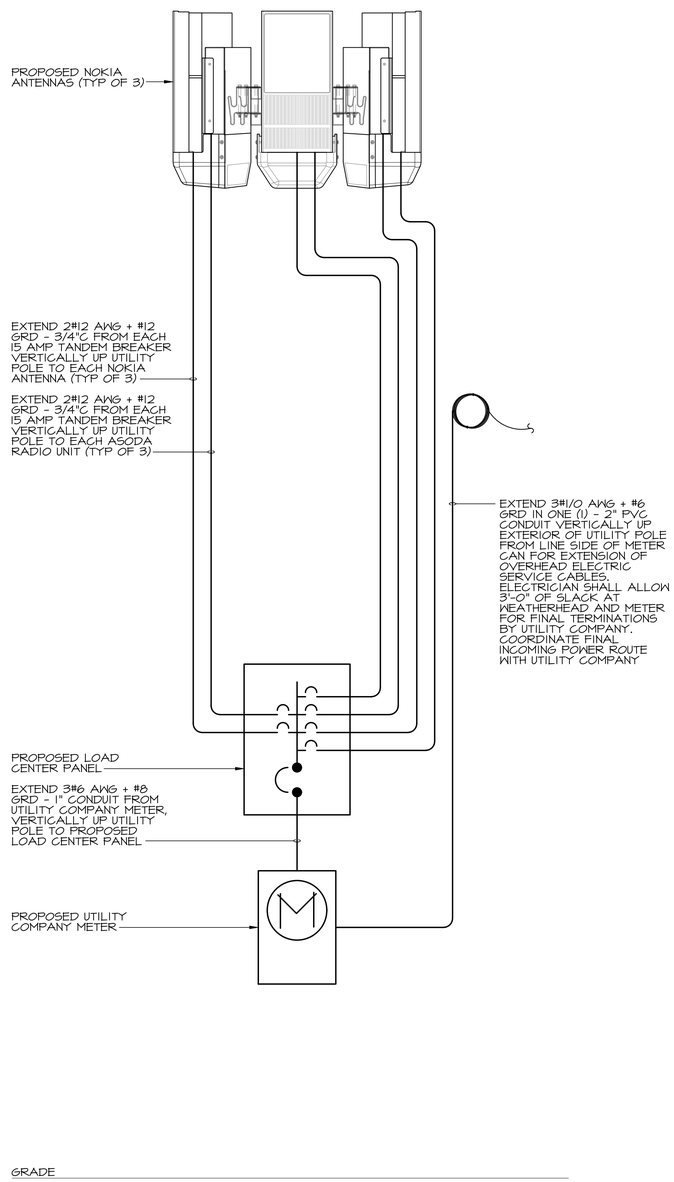

POWER ONE LINE DIAGRAM

NO SCALE

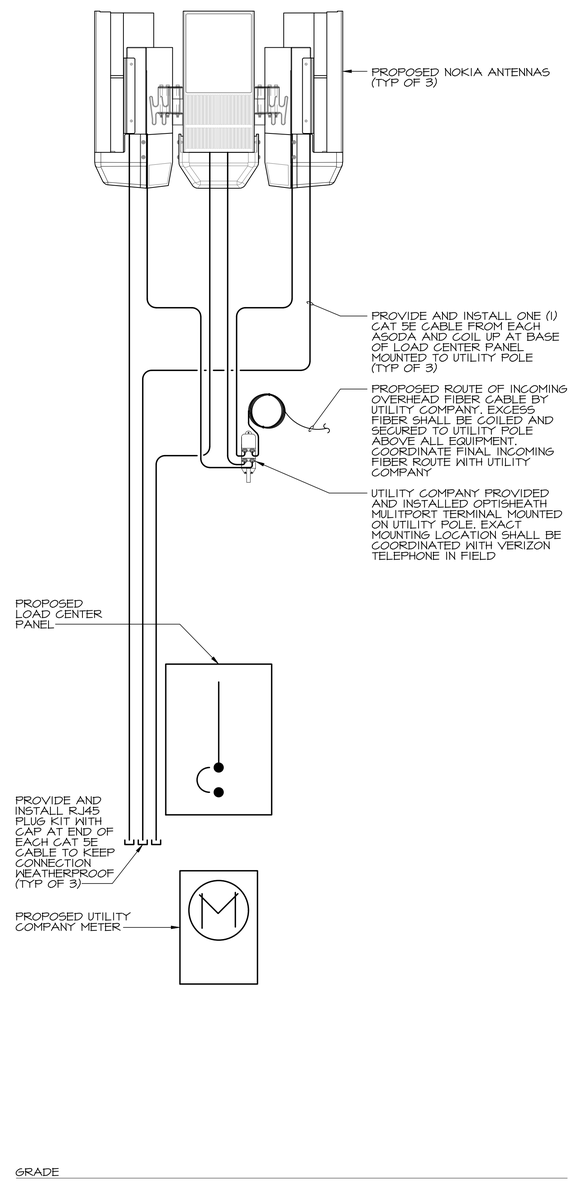

FIBER ONE LINE DIAGRAM

NO SCALE

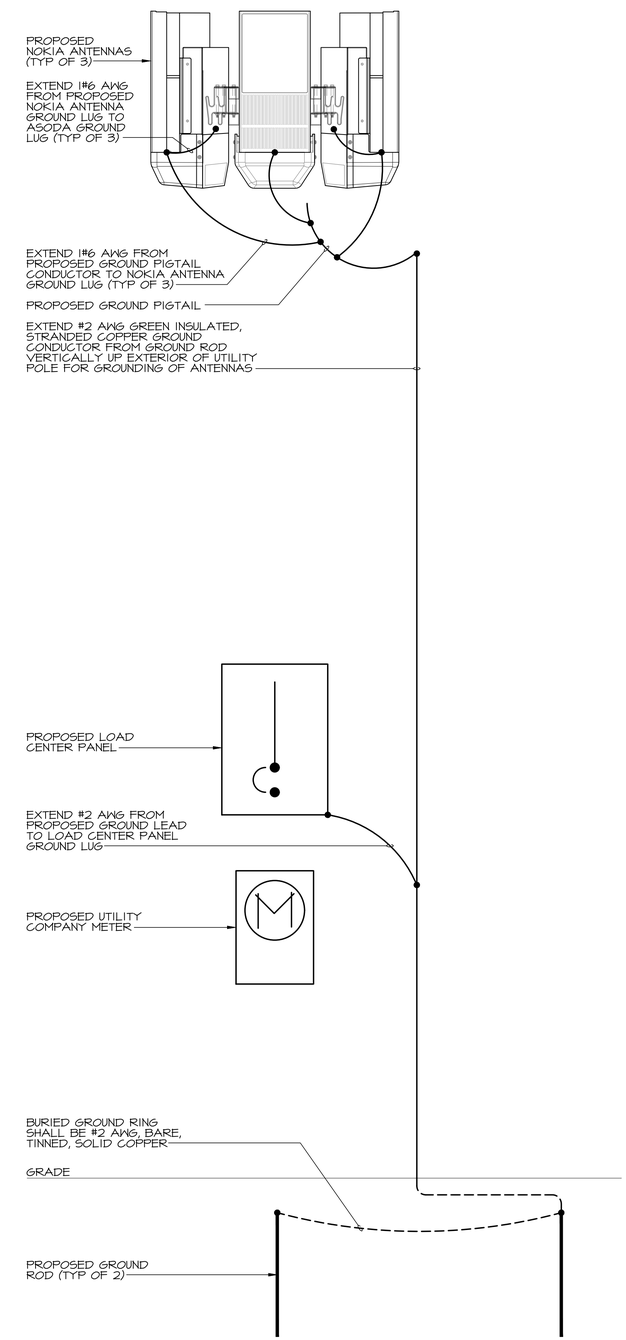

GROUNDING ONE LINE DIAGRAM

NO SCALE

TEI

TELEGENT ENGINEERING INC.
2216 Commerce Road, Suite 1
Forest Hill, MD 21050
410-692-5816
www.tei-eng.com

COMMONWEALTH OF VIRGINIA
TIMOTHY JOHN SMIDT
No. 029520
PROFESSIONAL ENGINEER

verizon

OLD TOWN 3 - SMALL CELL

SOUTH ROYAL STREET ROW ADJACENT TO 411 GIBBONS STREET, ALEXANDRIA
CITY OF ALEXANDRIA, VIRGINIA 22314

REVISIONS:

NO.	DESCRIPTION	DATE
	PERMIT DWGS.	1/22/20

LAST REV.:

PROJECT NO: 19154B

DATE: JANUARY 22, 2020

SCALE: AS NOTED

TITLE:
DIAGRAMS

SHEET:
E-4

TEI#19154B

MORRIS & RITCHIE
ASSOCIATES, INC.
1220-C East Joppa Road, Suite 505
Towson, Maryland 21286
410-821-1690
410-821-1748 Fax

Old Town 3

Overall Site Layout

28 January 2020

vertizon

MORRIS & RITCHIE
ASSOCIATES, INC.
1220-C East Joppa Road, Suite 505
Towson, Maryland 21286
410-821-1690
410-821-1748 Fax

Old Town 3

Existing View 1

28 January 2020

vertizon

MORRIS & RITCHIE ASSOCIATES, INC.
1220-C East Joppa Road, Suite 505
Towson, Maryland 21286
410-821-1690
410-821-1748 Fax

Old Town 3

Proposed View 1

28 January 2020

verizon

MORRIS & RITCHIE
ASSOCIATES, INC.
1220-C East Joppa Road, Suite 505
Towson, Maryland 21286
410-821-1690
410-821-1748 Fax

Old Town 3

Existing View 2

28 January 2020

vertizon

MORRIS & RITCHIE ASSOCIATES, INC.
1220-C East Joppa Road, Suite 505
Towson, Maryland 21286
410-821-1690
410-821-1748 Fax

Old Town 3

Proposed View 2

28 January 2020

verizon

MORRIS & RITCHIE
ASSOCIATES, INC.
1220-C East Joppa Road, Suite 505
Towson, Maryland 21286
410-821-1690
410-821-1748 Fax

Old Town 3

Existing View 3

28 January 2020

vertzon

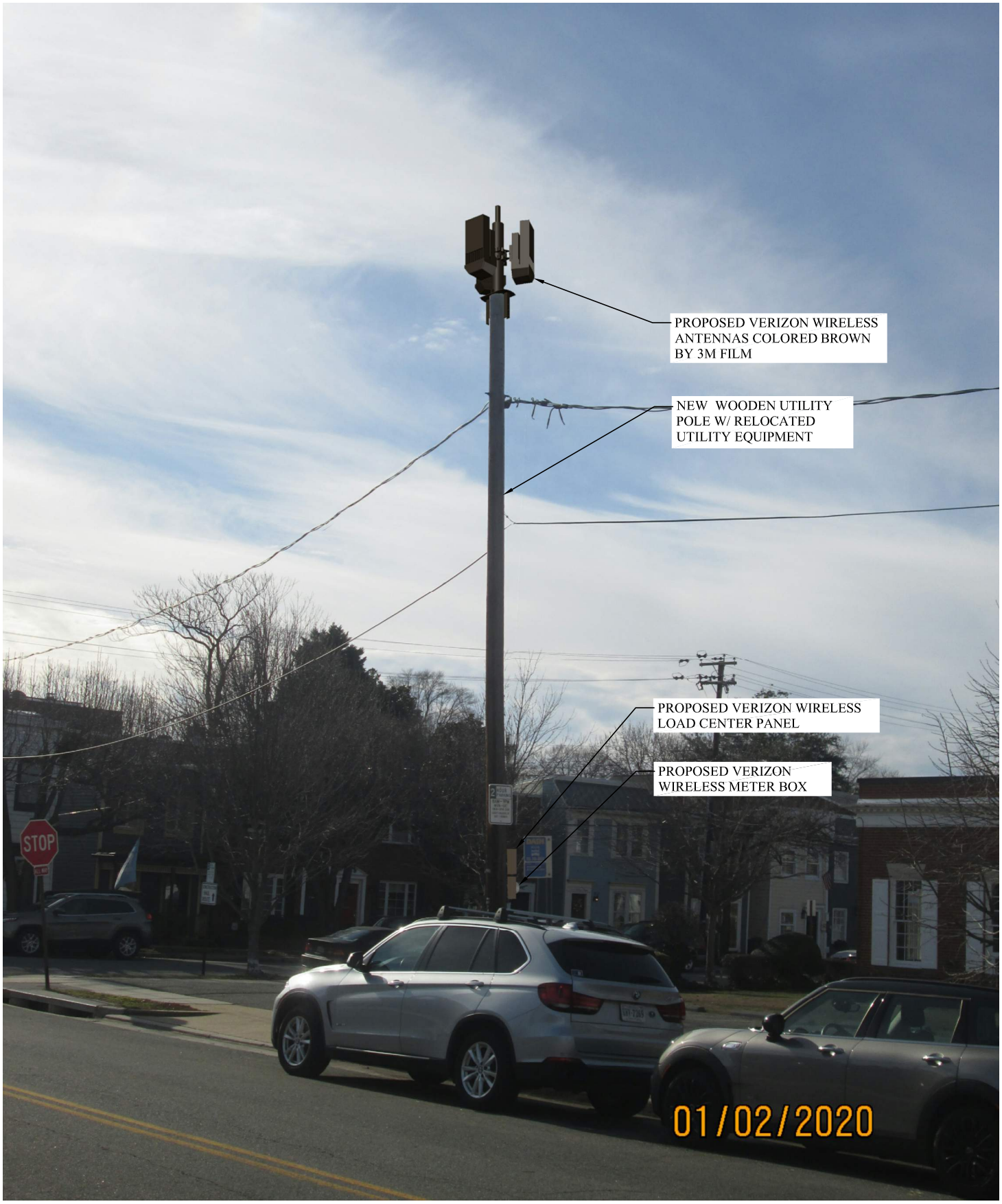

MORRIS & RITCHIE ASSOCIATES, INC.
1220-C East Joppa Road, Suite 505
Towson, Maryland 21286
410-821-1690
410-821-1748 Fax

Old Town 3

Proposed View 3

28 January 2020

vertizon

MORRIS & RITCHIE
ASSOCIATES, INC.
1220-C East Joppa Road, Suite 505
Towson, Maryland 21286
410-821-1690
410-821-1748 Fax

Old Town 3

Existing View 4

28 January 2020

vertzon

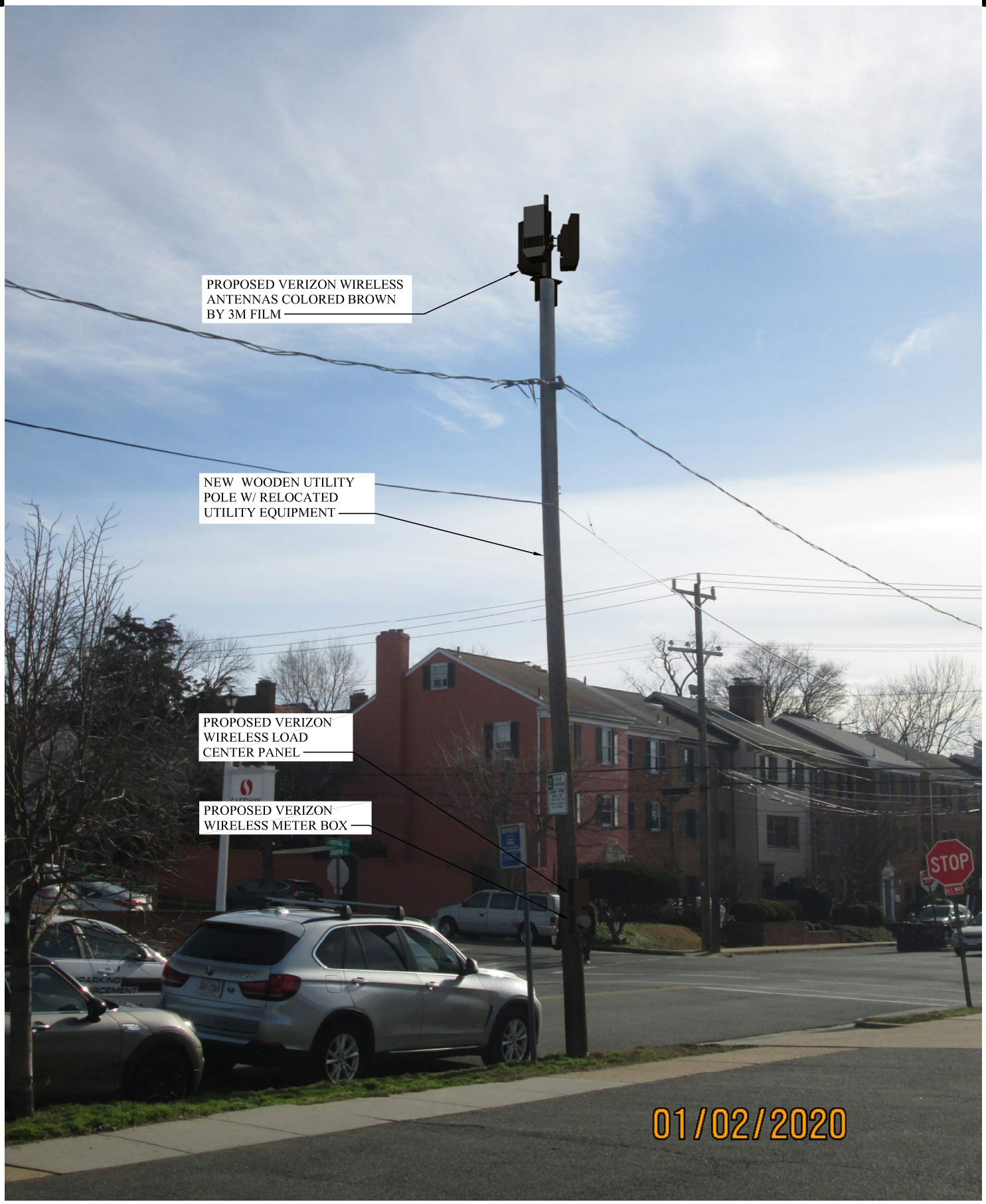

MORRIS & RITCHIE ASSOCIATES, INC.
1220-C East Joppa Road, Suite 505
Towson, Maryland 21286
410-821-1690
410-821-1748 Fax

Old Town 3

Proposed View 4

28 January 2020

vertizon