Docket #4
BAR #2022-00231
Parker Gray District
June 1, 2022

ISSUE: Certificate of Appropriateness for alterations

APPLICANT: Marks-Woods Construction Services LLC

LOCATION: Parker Gray District
419 North West Street

ZONE: RB/Residential Townhouse Zone

STAFF RECOMMENDATION

Staff recommends approval of the Certificate of Appropriateness for alterations as submitted.

GENERAL NOTES TO THE APPLICANT

1. APPEAL OF DECISION: In accordance with the Zoning Ordinance, if the Board of Architectural Review denies or approves an application in whole or in part, the applicant or opponent may appeal the Board's decision to City Council on or before 14 days after the decision of the Board.

2. COMPLIANCE WITH BAR POLICIES: All materials must comply with the BAR's adopted policies unless otherwise specifically approved.

3. BUILDING PERMITS: Most projects approved by the Board of Architectural Review require the issuance of one or more construction permits by Department of Code Administration (including signs). The applicant is responsible for obtaining all necessary construction permits after receiving Board of Architectural Review approval. Contact Code Administration, Room 4200, City Hall, 703-746-4200 for further information.

4. ISSUANCE OF CERTIFICATES OF APPROPRIATENESS AND PERMITS TO DEMOLISH: Applicants must obtain a copy of the Certificate of Appropriateness or Permit to Demolish PRIOR to applying for a building permit. Contact BAR Staff, Room 2100, City Hall, 703-746-3833, or preservation@alexandriava.gov for further information.

5. EXPIRATION OF APPROVALS NOTE: In accordance with Sections 10-106(B), 10-206(B) and 10-307 of the Zoning Ordinance, any Board of Architectural Review approval will expire 12 months from the date of issuance if the work is not commenced and diligently and substantially pursued by the end of that 12-month period.

6. HISTORIC PROPERTY TAX CREDITS: Applicants performing extensive, certified rehabilitations of historic properties may separately be eligible for state and/or federal tax credits. Consult with the Virginia Department of Historic Resources (VDHR) prior to initiating any work to determine whether the proposed project may qualify for such credits.

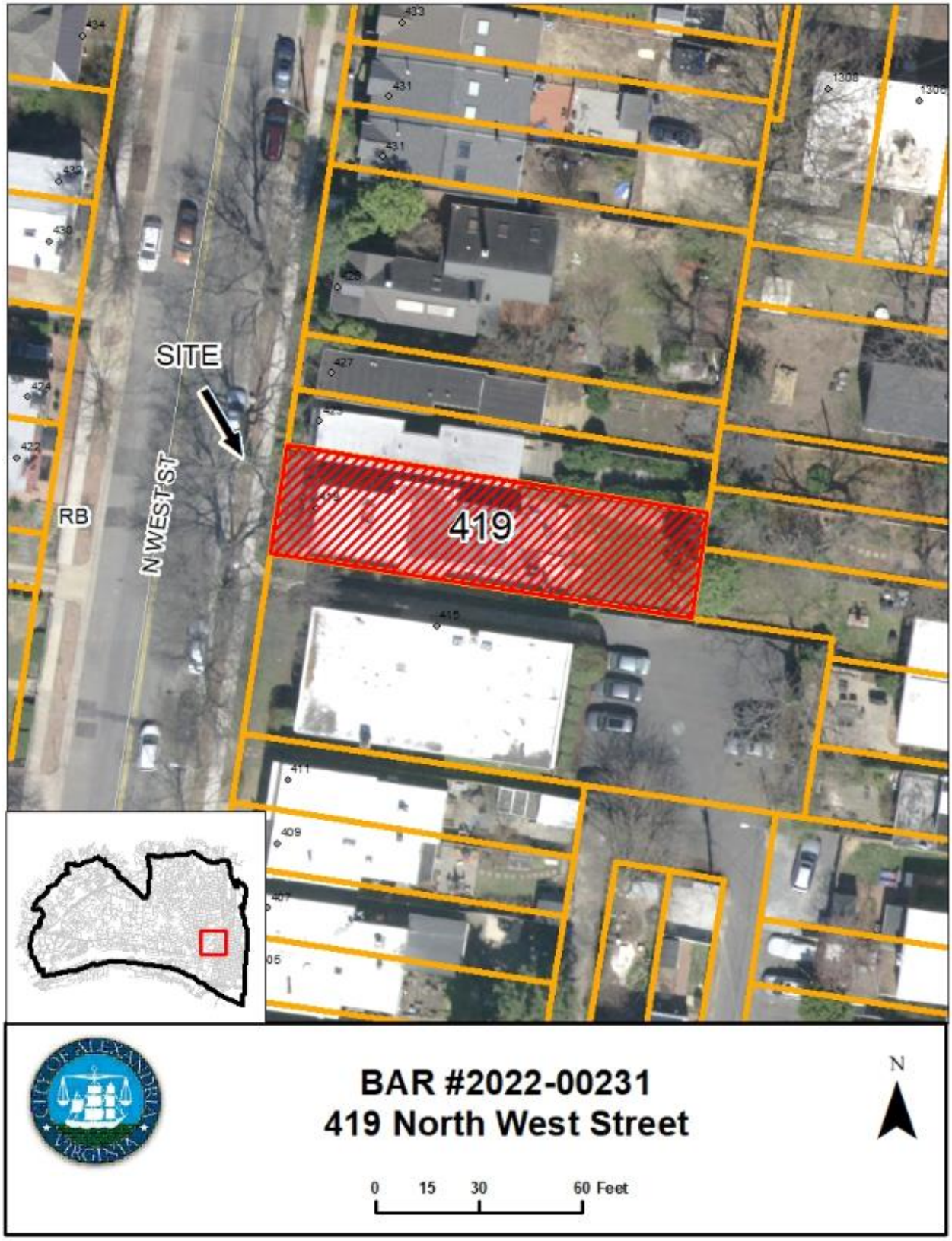
SITE
N WEST ST
RB
419
BAR #2022-00231
419 North West Street
N
0 15 30 60 Feet

I. APPLICANT'S PROPOSAL

The applicant requests a Certificate of Appropriateness for alterations to the existing structure. These alterations include the following:

West Elevation:

- Replace existing wood front entry door with similar wood door

South Elevation:

- Replace existing wood siding on modern addition with fiber cement panels
- Replace existing windows on addition with aluminum clad wood windows
- Replace second floor window with smaller awning type window
- Replace three ground floor doors with two sliding doors in the same opening

East Elevation:

- Replace existing wood siding on modern addition with fiber cement panels
- Replace existing windows on addition with aluminum clad wood windows
- Enlarge ground floor double door
- Replace ground floor window with narrower window
- Replace fixed second floor window with enlarged pair of casement windows
- Replace second floor pair of doors with narrower casement window to match first floor casement window

North Elevation:

- Replace existing wood siding on modern addition with fiber cement panels
- Replace existing windows on addition with aluminum clad wood windows
- Replace existing wood door with new wood door

Note that much of the proposed scope of work could be approved administratively, these items include the following:

- Replacement of entry doors
- Replacement of wood siding with fiber cement panels
- Replacement of existing windows on the addition with aluminum clad wood windows

Site Context

The project site is located mid-block on the east side of North West Street, there is no alley in this block. The multi-family building immediately to the south of the site includes a walkway adjacent to the south property line of the subject site, allowing for a view of the south elevation of the building. On the north side of the property, there is a gap between this and the neighboring building, allowing for visibility of the north elevation. The east elevation is not visible from a public right of way.

II. HISTORY

The brick veneered concrete block, two story house was constructed on an empty lot at 419 North West Street by 1941, according to Sanborn Fire Insurance Map. These maps indicate that the structure did not originally include a porch on the west side of the structure.

The existing house is representative of the modest housing that was built for and by the predominantly working-class residents of the Parker Gray area during the mid 20th century, during and after World War II. This house is unusual in that it is completely freestanding, when most houses of this period in Parker Gray were constructed as attached row houses. It is very plain in style but its red brick exterior and six over six, double hung windows suggest a connection to the Colonial Revival style which was favored in Alexandria through much of the 20th century.

The modern rear addition that is the subject of this application was approved by the Board in 2007 and constructed in 2008/2009. A reconstruction of the front porch including the installation of the current entry door was approved by the BAR in 2012.

Previous BAR Approvals:
12/12/07 – BAR 2007-0135 & 2007-0136 – Construction of modern rear addition
4/27/11 – BAR 2011-0072 – Fence Replacement
9/12/12 – BAR 2012-00278 – Porch replacement including entry door

III. ANALYSIS

The proposed area of demolition will be 18.48 square feet, as this is less than 25 square feet, a Permit to Demolish is not required.

As noted above, many of the proposed modifications can be approved through an administrative review, not requiring a full hearing. The doors to be replaced date from the 2012 renovation and clearly are not historic. The proposed design for the wood door is different than the more traditional design that the Board often sees for projects of this age, but it is stylistically similar to the one that is being replaced.

The applicant is proposing to replace the existing wood siding on the 2007 addition with painted fiber cement panels. While the change from siding to large panels has an important impact on the overall design of the addition, the fiber cement panels are more in keeping with the modern design aesthetic of the addition and comply with the requirements of the Residential Reference Guide (RRG) for later buildings in the Parker Gray District. Similarly, the use of aluminum clad wood windows on the sides and rear of a later building also complies with the RRG.

The proposed reconfiguration of windows and doors on the east elevation are not visible from a public right of way so are therefore not under the purview of the BAR. The reconfiguration of windows on the south elevation are visible from a public right of way through the slot between the subject building and the property to the south. Staff finds that this minor modification does not impact the architectural character of the overall design and supports the modification that will make the interior space more usable. See figure 1 through 4 below for the proposed building elevations.

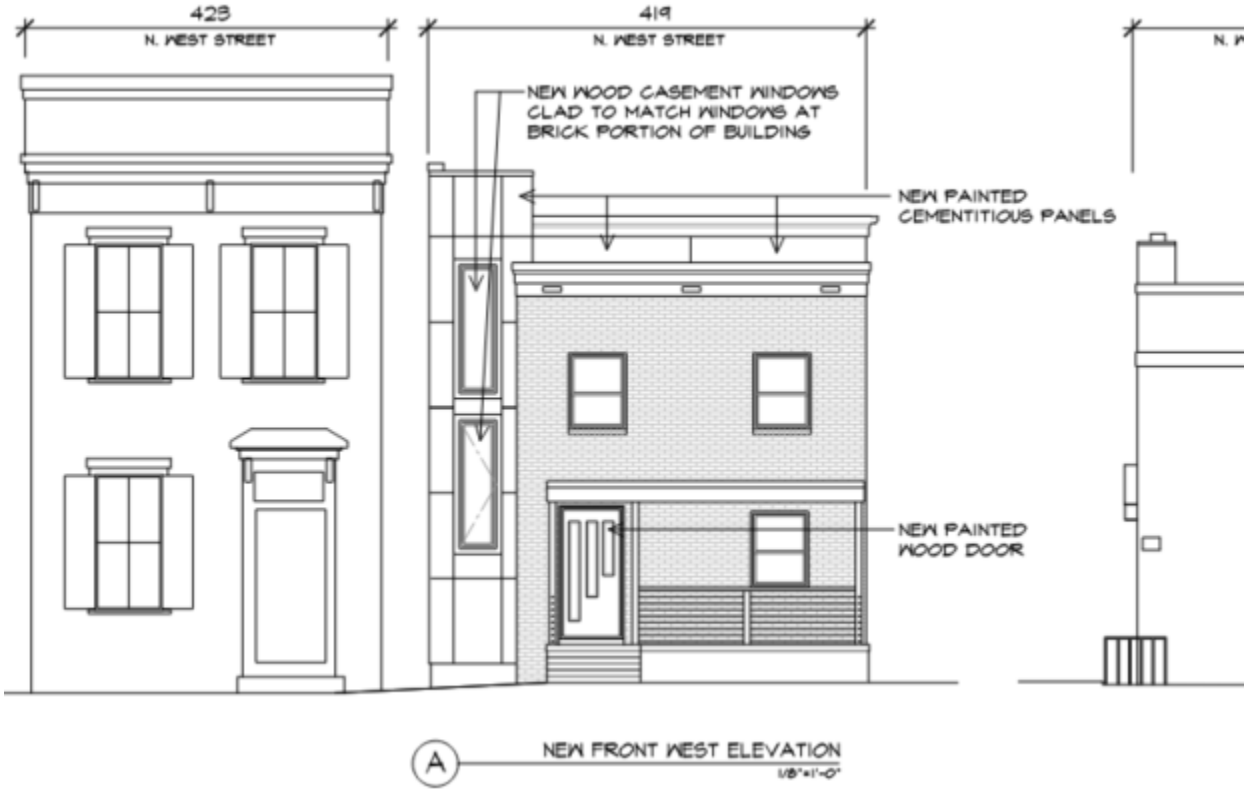

Figure 1: Proposed west elevation

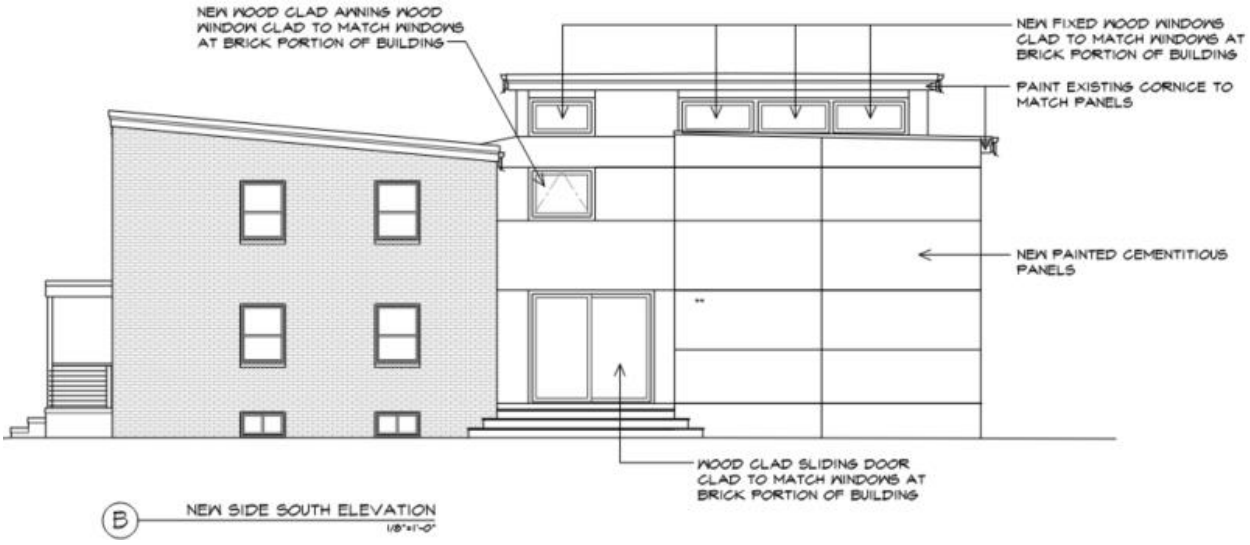

Figure 2: Proposed south elevation

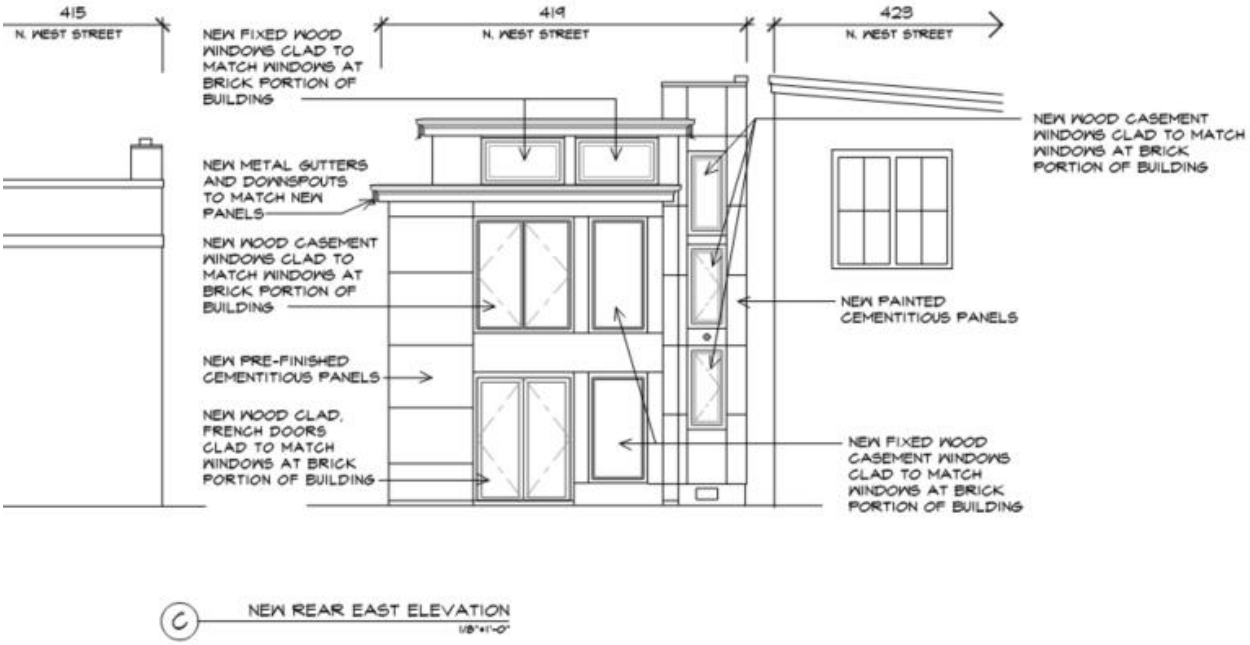

Figure 3: Proposed east elevation

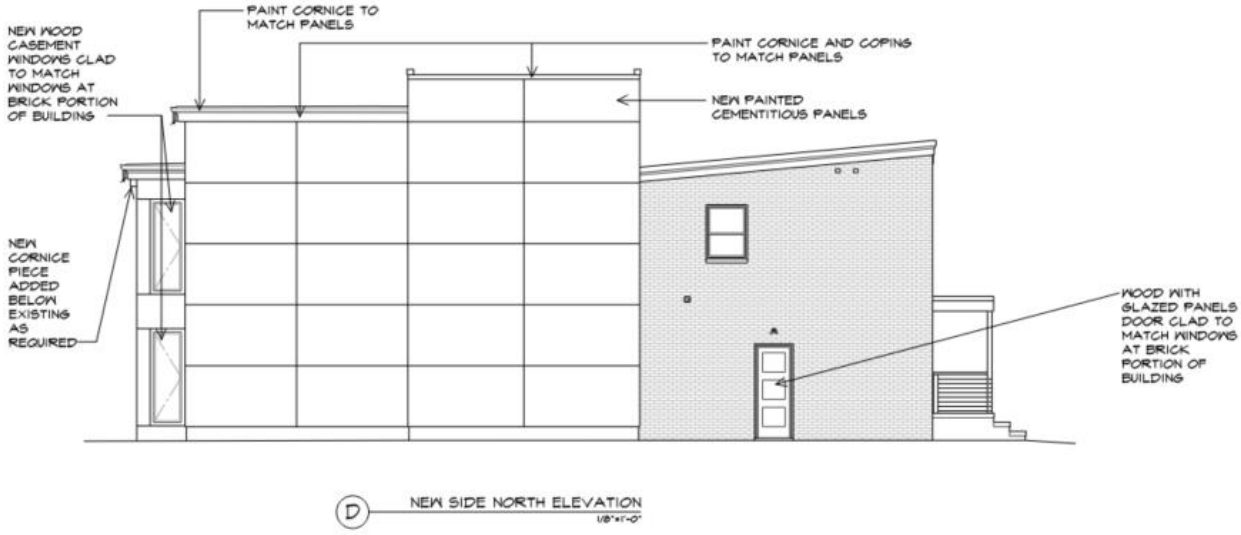

Figure 4: Proposed north elevation

Staff finds that the proposed design complies with the Design Guidelines and recommends that the Board approve the Certificate of Appropriateness as submitted.

STAFF

Bill Conkey, AIA, Historic Preservation Planner, Planning & Zoning
Tony LaColla, AICP, Land Use Services Division Chief, Planning & Zoning

CITY DEPARTMENT COMMENTS

Legend: C- code requirement R- recommendation S- suggestion F- finding

Zoning

F-1 The proposed window and siding replacement will comply with zoning

Code Administration

C-1 No comment

Transportation and Environmental Services

R-1 The building permit must be approved and issued prior to the issuance of any permit for demolition, if a separate demolition permit is required. (T&ES)

R-2 Applicant shall be responsible for repairs to the adjacent city right-of-way if damaged during construction activity. (T&ES)

R-3 No permanent structure may be constructed over any existing private and/or public utility easements. It is the responsibility of the applicant to identify any and all existing easements on the plan. (T&ES)

F-1 After review of the information provided, an approved grading plan is not required at this time. Please note that if any changes are made to the plan it is suggested that T&ES be included in the review. (T&ES)

C-1 The applicant shall comply with the City of Alexandria's Solid Waste Control, Title 5, Chapter 1, which sets forth the requirements for the recycling of materials (Sec. 5-1-99). (T&ES)

C-2 The applicant shall comply with the City of Alexandria's Noise Control Code, Title 11, Chapter 5, which sets the maximum permissible noise level as measured at the property line. (T&ES)

C-3 Roof, surface and sub-surface drains be connected to the public storm sewer system, if available, by continuous underground pipe. Where storm sewer is not available applicant must provide a design to mitigate impact of stormwater drainage onto adjacent properties and to the satisfaction of the Director of Transportation & Environmental Services. (Sec.5-6-224) (T&ES)

C-4 All secondary utilities serving this site shall be placed underground. (Sec. 5-3-3) (T&ES)

C-5 Any work within the right-of-way requires a separate permit from T&ES. (Sec. 5-2) (T&ES)

C-6 All improvements to the city right-of-way such as curbing, sidewalk, driveway aprons, etc. must be city standard design. (Sec. 5-2-1) (T&ES)

Alexandria Archaeology

F-1 Archaeological oversight will not be necessary for this undertaking.

V. ATTACHMENTS

1 – Supplemental Materials
2 – Application for BAR 2022-00231 – 419 North West Street

BAR Case # _____

ADDRESS OF PROJECT: 419 ~~Alfr~~ N. West St

DISTRICT: ☐ Old & Historic Alexandria ☒ Parker – Gray ☐ 100 Year Old Building

TAX MAP AND PARCEL: _____ ZONING: _____

APPLICATION FOR: *(Please check all that apply)*

☒ CERTIFICATE OF APPROPRIATENESS

☒ PERMIT TO MOVE, REMOVE, ENCAPSULATE OR DEMOLISH
(Required if more than 25 square feet of a structure is to be demolished/impacted)

☐ WAIVER OF VISION CLEARANCE REQUIREMENT and/or YARD REQUIREMENTS IN A VISION CLEARANCE AREA (Section 7-802, Alexandria 1992 Zoning Ordinance)

☐ WAIVER OF ROOFTOP HVAC SCREENING REQUIREMENT
(Section 6-403(B)(3), Alexandria 1992 Zoning Ordinance)

Applicant: ☐ Property Owner ☒ Business *(Please provide business name & contact person)*

Name: Marks-Woods Construction Services LLC

Address: 205 S Union St

City: Alexandria State: VA Zip: 22314

Phone: 703-928-2513 E-mail: gmarks@markswoods.com

Authorized Agent *(if applicable)*: ☐ Attorney ☐ Architect ☒ permit expediter

Name: Lee Horton Phone: 703-989-8310

E-mail: leehortonjade@gmail.com - JADE Permit Service

Legal Property Owner:

Name: Henry and Jessica Almond

Address: 419 ~~N~~ West St

City: Alexandria State: VA Zip: 22314

Phone: 703-928-2513 E-mail: gmarks@markswoods.com

☐ Yes ☒ No Is there an historic preservation easement on this property?
☐ Yes ☐ No If yes, has the easement holder agreed to the proposed alterations?
☐ Yes ☒ No Is there a homeowner's association for this property?
☐ Yes ☐ No If yes, has the homeowner's association approved the proposed alterations?

If you answered yes to any of the above, please attach a copy of the letter approving the project.

BAR Case # _____

NATURE OF PROPOSED WORK: *Please check all that apply*

- [ ] NEW CONSTRUCTION
- [x] EXTERIOR ALTERATION: *Please check all that apply.*
  - [ ] awning
  - [ ] doors
  - [ ] lighting
  - [ ] other _____
  - [ ] fence, gate or garden wall
  - [x] windows
  - [ ] pergola/trellis
  - [ ] HVAC equipment
  - [x] siding
  - [ ] painting unpainted masonry
  - [ ] shutters
  - [ ] shed
- [ ] ADDITION
- [x] DEMOLITION/ENCAPSULATION
- [ ] SIGNAGE

DESCRIPTION OF PROPOSED WORK: *Please describe the proposed work in detail (Additional pages may be attached).*

Replacing rear siding and windows due to discrepair, on existing rear addition

SUBMITTAL REQUIREMENTS:

Items listed below comprise the **minimum supporting materials** for BAR applications. Staff may request additional information during application review. Please refer to the relevant section of the *Design Guidelines* for further information on appropriate treatments.

Applicants must use the checklist below to ensure the application is complete. Include all information and material that are necessary to thoroughly describe the project. Incomplete applications will delay the docketing of the application for review. Pre-application meetings are required for all proposed additions. All applicants are encouraged to meet with staff prior to submission of a completed application.

Demolition/Encapsulation : *All applicants requesting 25 square feet or more of demolition/encapsulation must complete this section. Check N/A if an item in this section does not apply to your project.*

N/A

- [ ] [ ] Survey plat showing the extent of the proposed demolition/encapsulation.
- [x] [ ] Existing elevation drawings clearly showing all elements proposed for demolition/encapsulation.
- [x] [ ] Clear and labeled photographs of all elevations of the building if the entire structure is proposed to be demolished.
- [x] [ ] Description of the reason for demolition/encapsulation.
- [x] [ ] Description of the alternatives to demolition/encapsulation and why such alternatives are not considered feasible.

BAR Case # _____

Additions & New Construction: *Drawings must be to scale and should not exceed 11" x 17" unless approved by staff. Check N/A if an item in this section does not apply to your project.*

N/A

- ☐ ☐ Scaled survey plat showing dimensions of lot and location of existing building and other structures on the lot, location of proposed structure or addition, dimensions of existing structure(s), proposed addition or new construction, and all exterior, ground and roof mounted equipment.
- ☐ ☐ FAR & Open Space calculation form.
- ☐ ☐ Clear and labeled photographs of the site, surrounding properties and existing structures, if applicable.
- ☐ ☐ Existing elevations must be scaled and include dimensions.
- ☐ ☐ Proposed elevations must be scaled and include dimensions. Include the relationship to adjacent structures in plan and elevations.
- ☐ ☐ Materials and colors to be used must be specified and delineated on the drawings. Actual samples may be provided or required.
- ☐ ☐ Manufacturer's specifications for materials to include, but not limited to: roofing, siding, windows, doors, lighting, fencing, HVAC equipment and walls.
- ☐ ☐ For development site plan projects, a model showing mass relationships to adjacent properties and structures.

Signs & Awnings: *One sign per building under one square foot does not require BAR approval unless illuminated. All other signs including window signs require BAR approval. Check N/A if an item in this section does not apply to your project.*

N/A

- ☐ ☐ Linear feet of building: Front: _____ Secondary front (if corner lot): _____.
- ☐ ☐ Square feet of existing signs to remain: _____.
- ☐ ☐ Photograph of building showing existing conditions.
- ☐ ☐ Dimensioned drawings of proposed sign identifying materials, color, lettering style and text.
- ☐ ☐ Location of sign (show exact location on building including the height above sidewalk).
- ☐ ☐ Means of attachment (drawing or manufacturer's cut sheet of bracket if applicable).
- ☐ ☐ Description of lighting (if applicable). Include manufacturer's cut sheet for any new lighting fixtures and information detailing how it will be attached to the building's facade.

Alterations: *Check N/A if an item in this section does not apply to your project.*

N/A

- ☑ ☐ Clear and labeled photographs of the site, especially the area being impacted by the alterations, all sides of the building and any pertinent details.
- ☑ ☐ Manufacturer's specifications for materials to include, but not limited to: roofing, siding, windows, doors, lighting, fencing, HVAC equipment and walls.
- ☑ ☐ Drawings accurately representing the changes to the proposed structure, including materials and overall dimensions. Drawings must be to scale.
- ☐ N/A An official survey plat showing the proposed locations of HVAC units, fences, and sheds.
- ☐ N/A Historic elevations or photographs should accompany any request to return a structure to an earlier appearance.

BAR Case # _____

ALL APPLICATIONS: *Please read and check that you have read and understand the following items:*

Will pay when amount is posted on line.

☐ I have submitted a filing fee with this application. (Checks should be made payable to the City of Alexandria. Please contact staff for assistance in determining the appropriate fee.)

☑ I understand the notice requirements and will return a copy of the three respective notice forms to BAR staff at least five days prior to the hearing. If I am unsure to whom I should send notice I will contact Planning and Zoning staff for assistance in identifying adjacent parcels.

☑ I, the applicant, or an authorized representative will be present at the public hearing.

☑ I understand that any revisions to this initial application submission (including applications deferred for restudy) must be accompanied by the BAR Supplemental form and revised materials.

The undersigned hereby attests that all of the information herein provided including the site plan, building elevations, prospective drawings of the project, and written descriptive information are true, correct and accurate. The undersigned further understands that, should such information be found incorrect, any action taken by the Board based on such information may be invalidated. The undersigned also hereby grants the City of Alexandria permission to post placard notice as required by Article XI, Division A, Section 11-301(B) of the 1992 Alexandria City Zoning Ordinance, on the property which is the subject of this application. The undersigned also hereby authorizes the City staff and members of the BAR to inspect this site as necessary in the course of research and evaluating the application. The applicant, if other than the property owner, also attests that he/she has obtained permission from the property owner to make this application.

APPLICANT OR AUTHORIZED AGENT:

Signature: Lee Horton

Printed Name: Lee Horton

Date: 5/2/2022

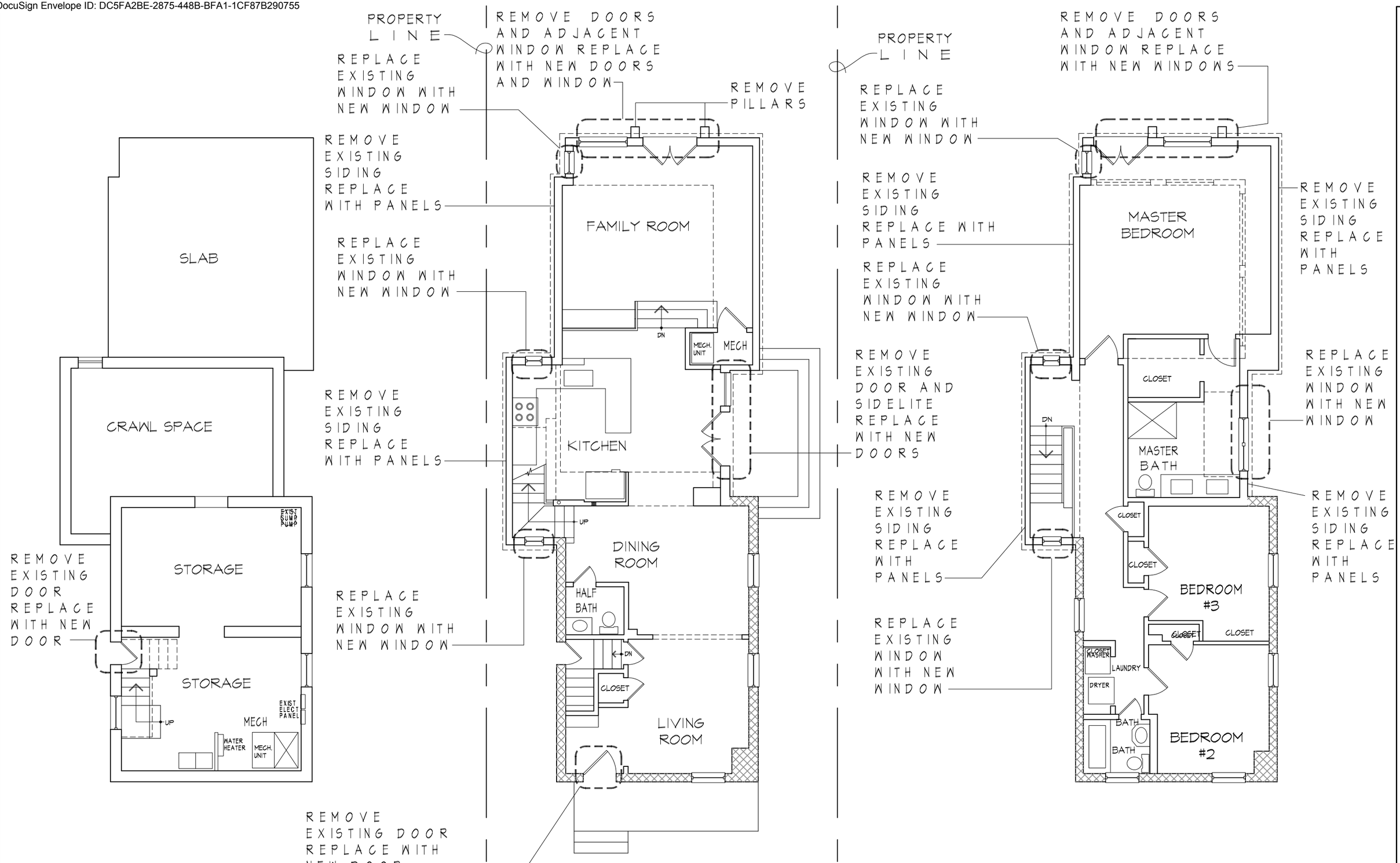

PASTEUR DESIGNS
9303 IRVING STREET
MANASSAS VA
20110-5110
E-MAIL • lucy@pasteurdesigns.com
TELEPHONE • 703 393 8706
FACSIMILE • 703 393 8706

MARKS-WOODS CONSTRUCTION SERVICES

ALMOND RESIDENCE
419 N WEST STREET
ALEXANDRIA VIRGINIA

ISSUE DATE
DESIGN
12/16/21
02/03/22
02/17/22
02/25/22
02/26/22

BAR
05/02/22

SHEET TITLE
EXISTING PLANS

SHEET NUMBER
A-1

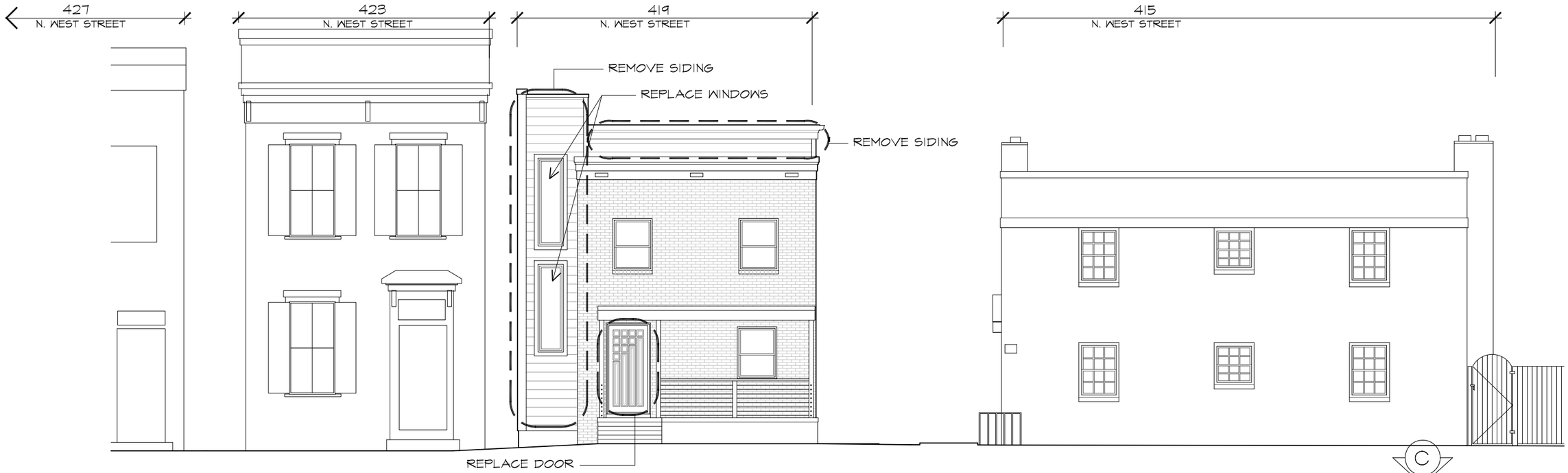

A EXISTING FRONT WEST ELEVATION
1/8"=1'-0"

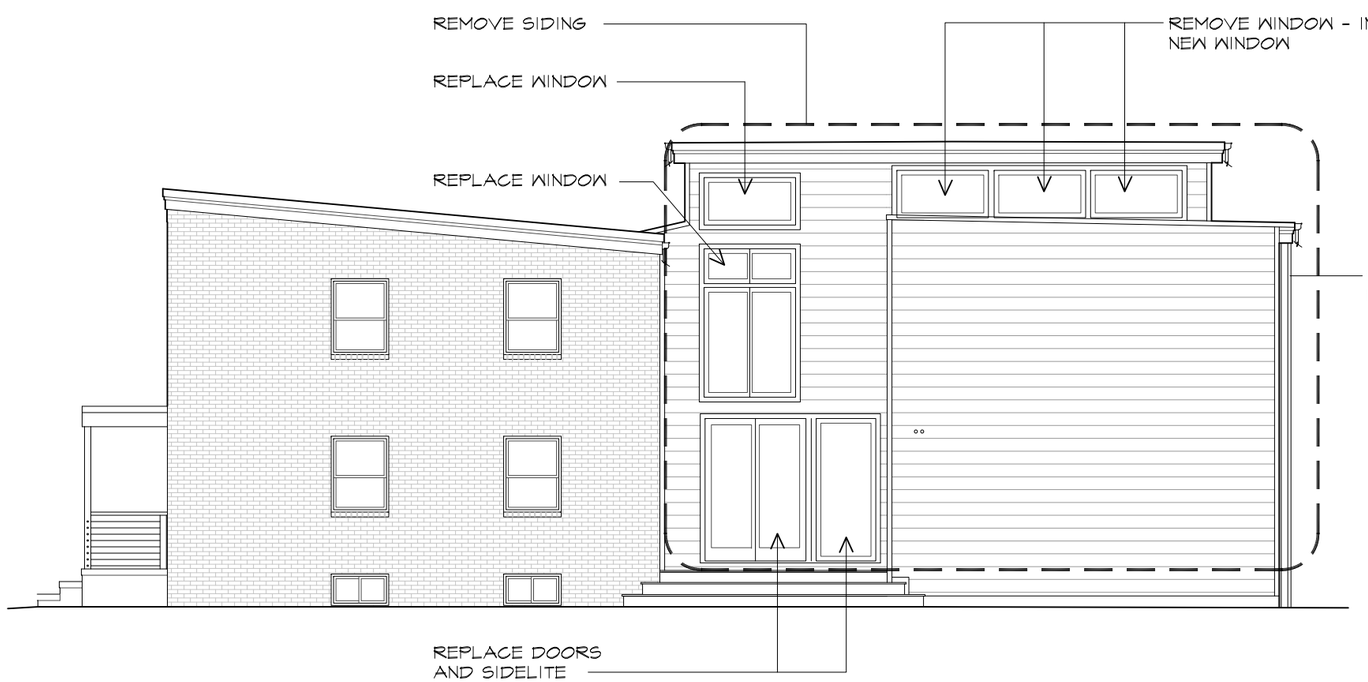

B EXISTING SIDE SOUTH ELEVATION
1/8"=1'-0"

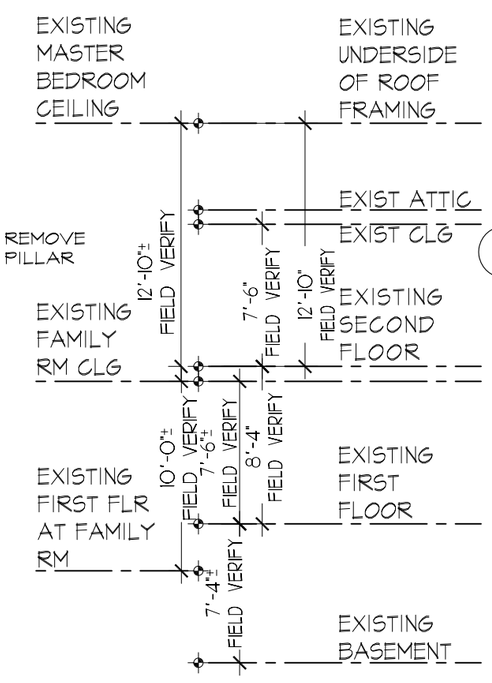

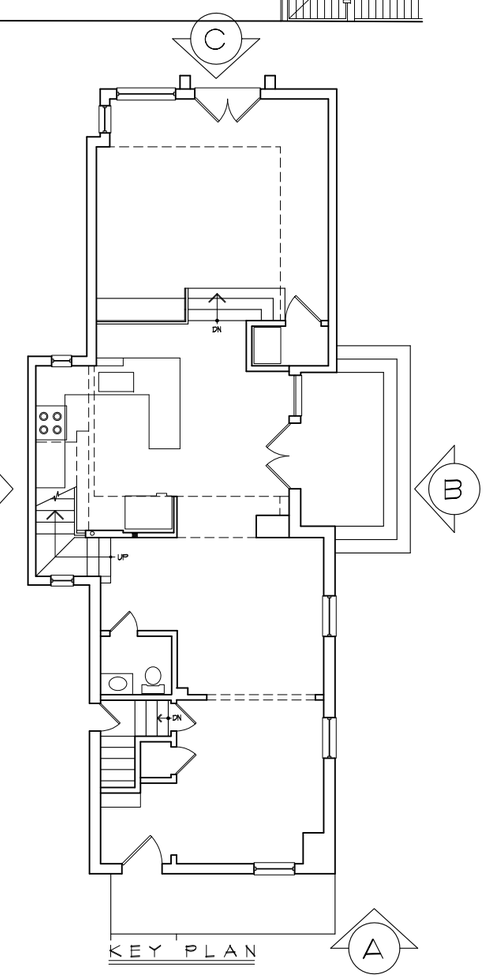

KEY PLAN

PASTEUR DESIGNS
9303 IRVING STREET
MANASSAS VA
20110-5110
E-MAIL • lucy@pasteurdesigns.com
TELEPHONE • 703 393 8706
FACSIMILE • 703 393 8706

MARKS-WOODS CONSTRUCTION SERVICES

ALMOND RESIDENCE
419 WEST STREET
ALEXANDRIA VIRGINIA

ISSUE DATE
DESIGN
12/16/21
02/03/22
02/17/22
02/25/22
02/26/22

BAR
05/02/22

SHEET TITLE
EXISTING ELEVATIONS

SHEET NUMBER
A-2

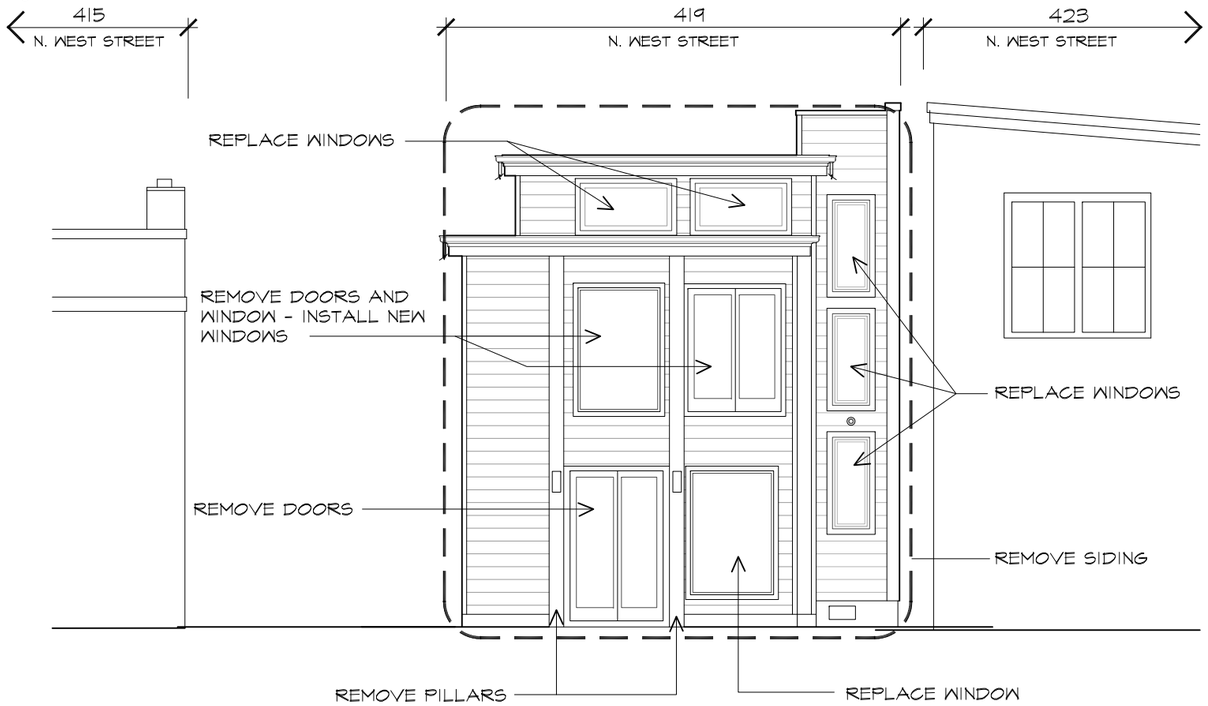

C EXISTING REAR EAST ELEVATION
1/8"=1'-0"

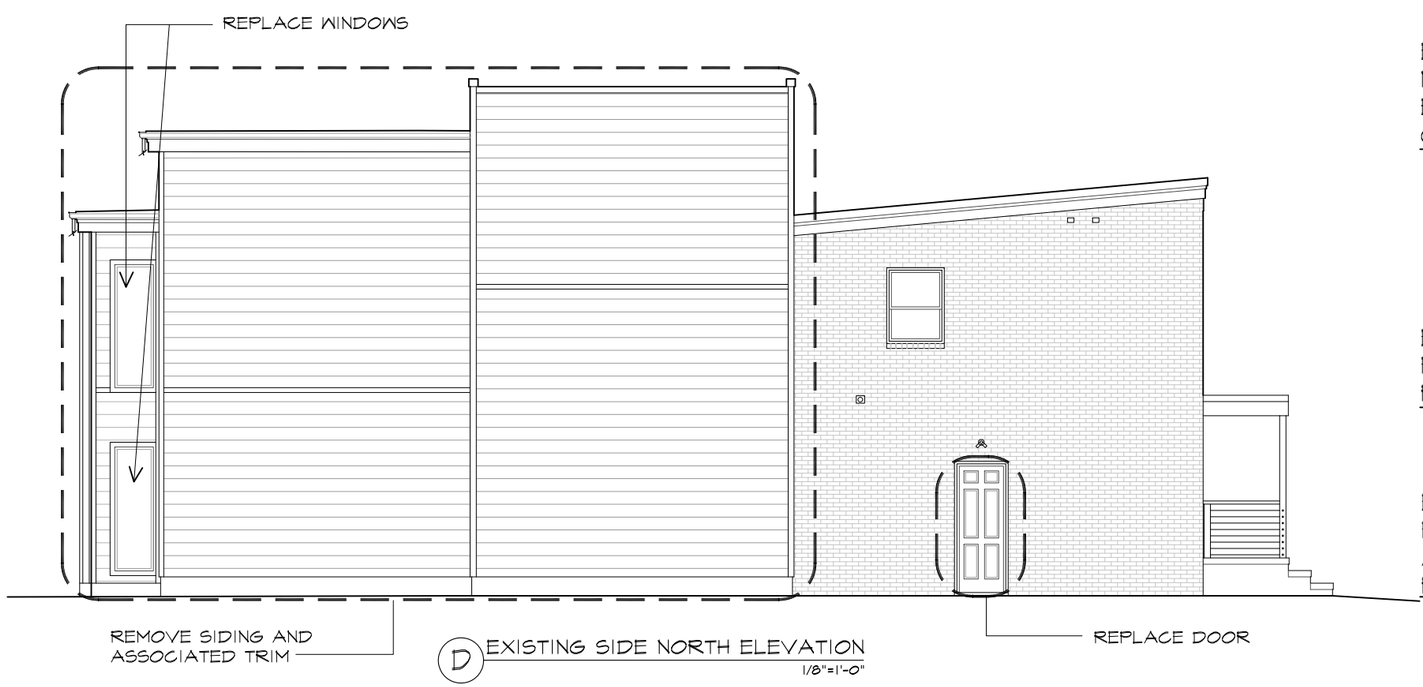

D EXISTING SIDE NORTH ELEVATION
1/8"=1'-0"

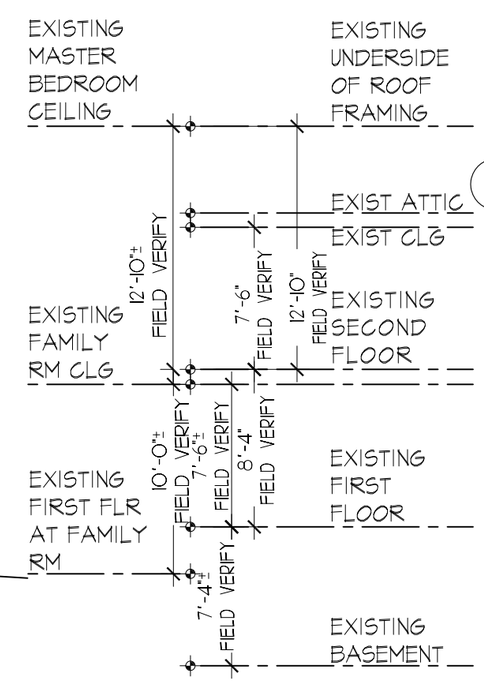

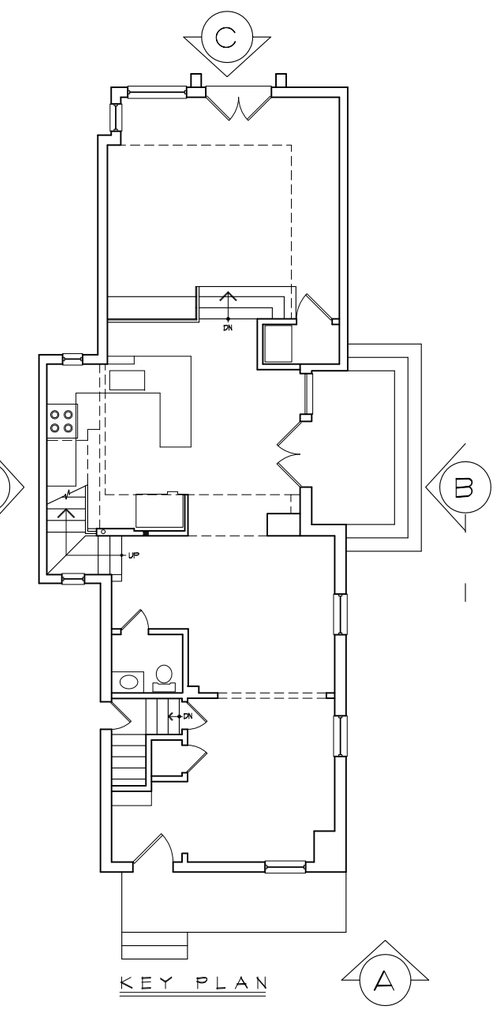

KEY PLAN

PASTEUR DESIGNS
9303 IRVING STREET
MANASSAS VA
20110-5110
E-MAIL • lucy@pasteurdesigns.com
TELEPHONE • 703 393 8706
FACSIMILE • 703 393 8706

MARKS-WOODS CONSTRUCTION SERVICES

ALMOND RESIDENCE
419 N WEST STREET
ALEXANDRIA VIRGINIA

ISSUE DATE
DESIGN
12/16/21
02/03/22
02/17/22
02/25/22
02/26/22

BAR
05/02/22

SHEET TITLE
EXISTING ELEVATIONS

SHEET NUMBER
A-3

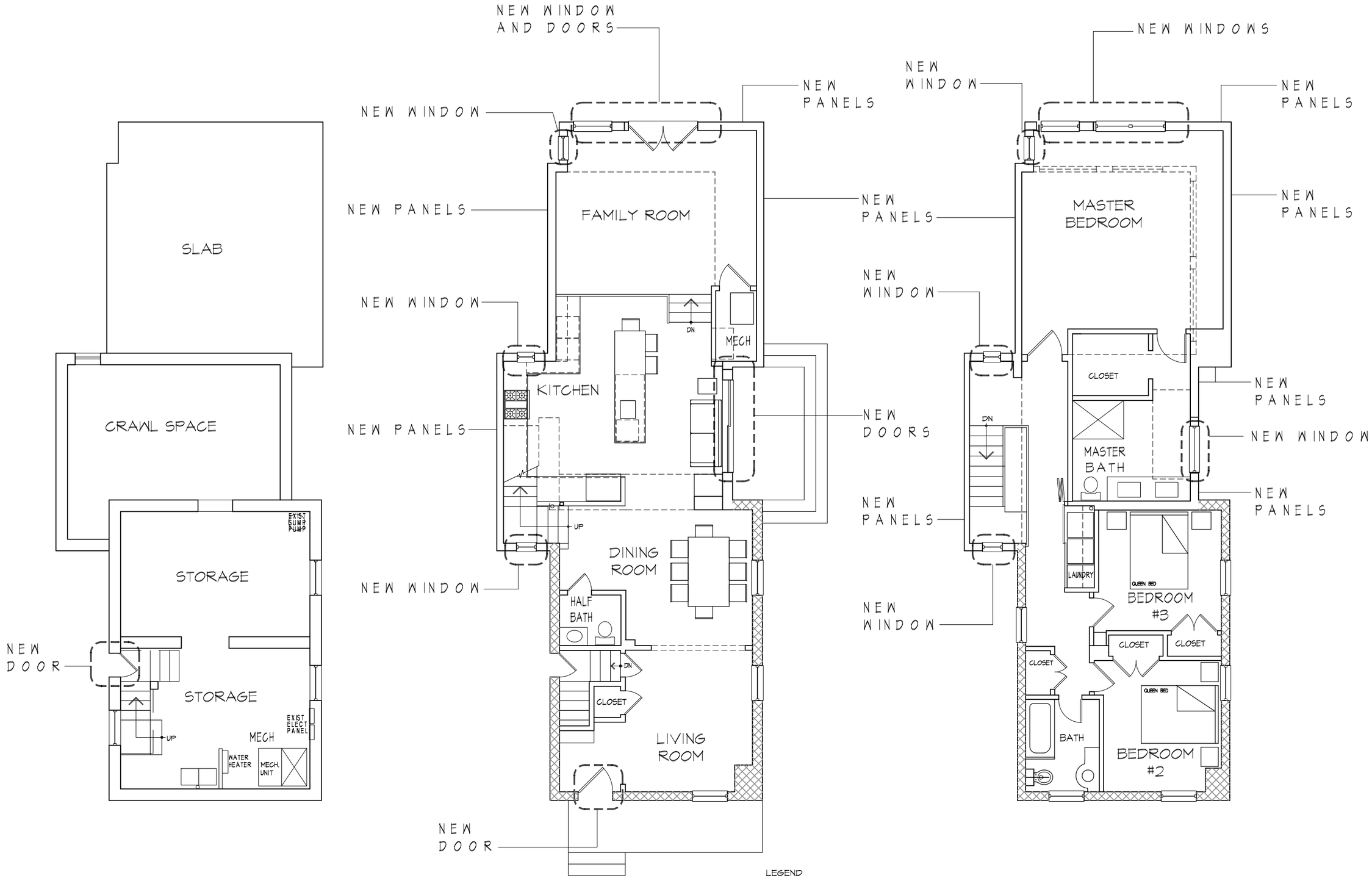

N E W
BASEMENT
P L A N
1/8"=1'-0"

N E W
FIRST FLOOR
P L A N
1/8"=1'-0"

N E W
SECOND FLOOR
P L A N
1/8"=1'-0"

PASTEUR DESIGNS
9303 IRVING STREET
MANASSAS VA
20110-5110
E-MAIL • lucy@pasteurdesigns.com
TELEPHONE • 703 393 8706
FACSIMILE • 703 393 8706

MARKS-WOODS CONSTRUCTION SERVICES

A L M O N D RESIDENCE
419N WEST STREET
ALEXANDRIA VIRGINIA

ISSUE DATE
DESIGN
12/16/21
02/03/22
02/17/22
02/25/22
02/26/22

B A R
05/02/22

SHEET TITLE
N E W
P L A N S

SHEET NUMBER
A-4

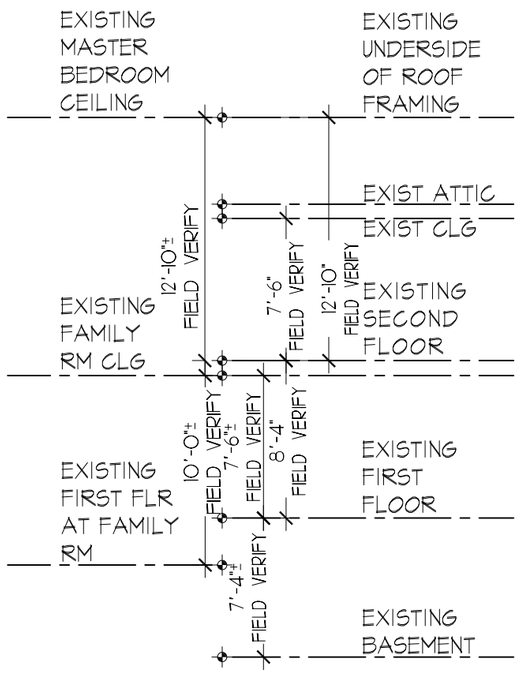

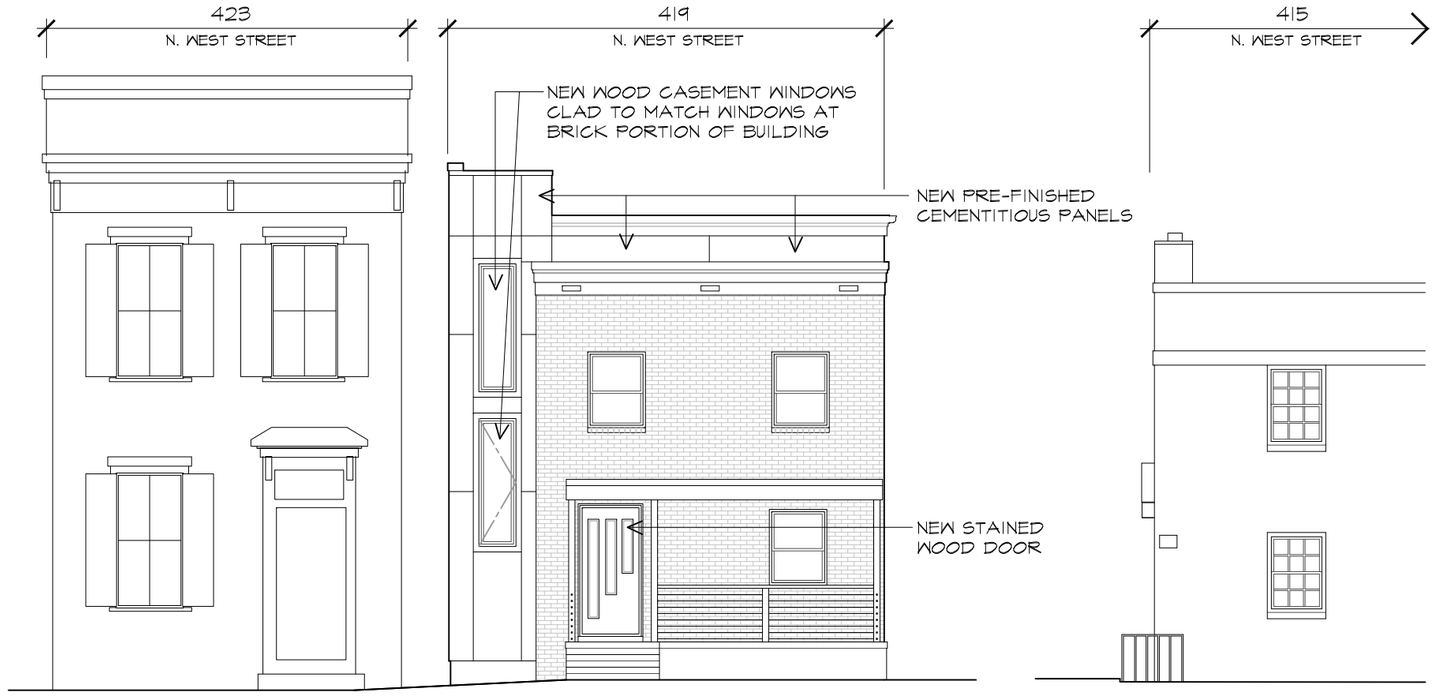

A NEW FRONT WEST ELEVATION
1/8"=1'-0"

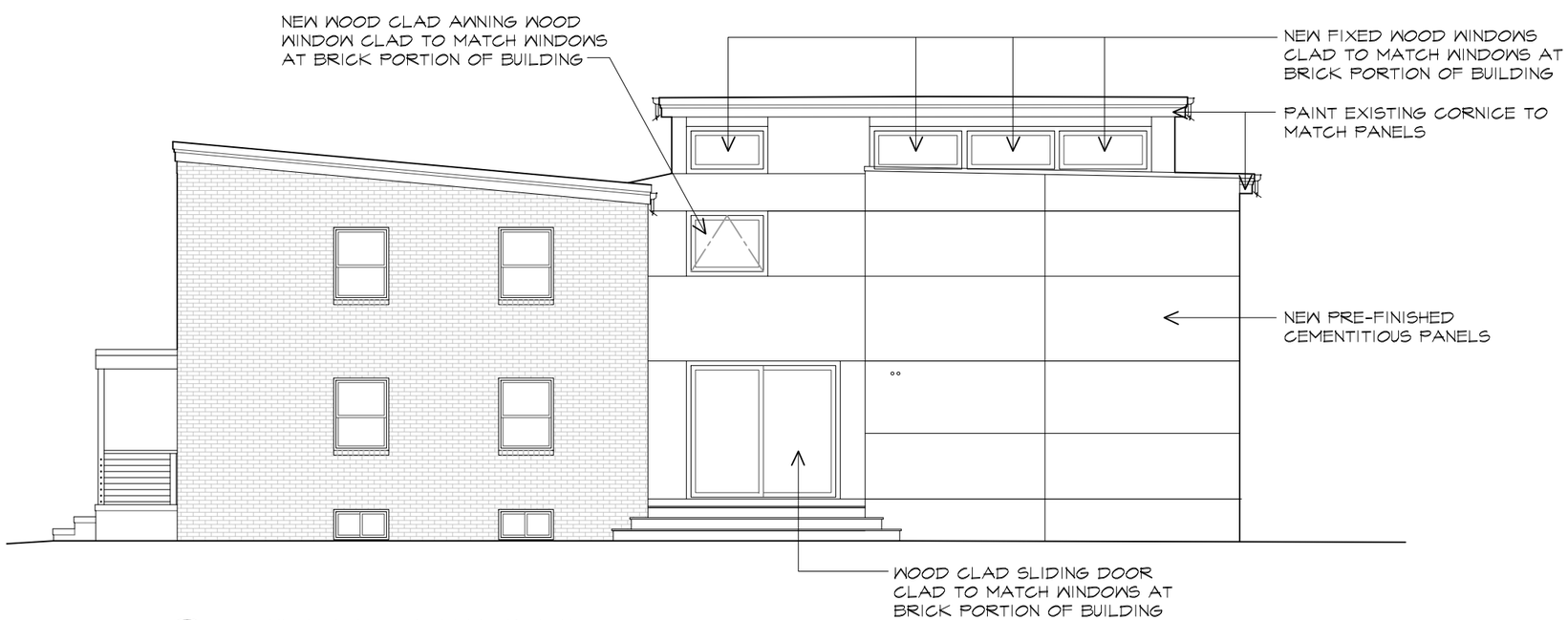

B NEW SIDE SOUTH ELEVATION
1/8"=1'-0"

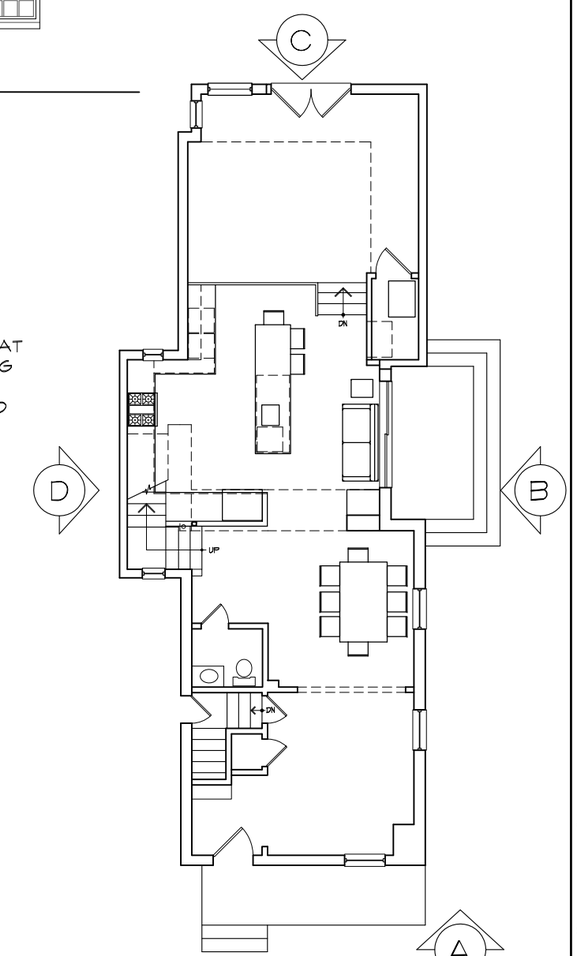

KEY PLAN

PASTEUR DESIGNS
9303 IRVING STREET
MANASSAS VA
20110-5110
E-MAIL • lucy@pasteurdesigns.com
TELEPHONE • 703 393 8706
FACSIMILE • 703 393 8706

MARKS WOODS CONSTRUCTION SERVICES

ALMOND RESIDENCE
419 N WEST STREET
ALEXANDRIA VIRGINIA

ISSUE DATE
DESIGN
12/16/21
02/03/22
02/17/22
02/25/22
02/26/22

B A R
05/02/22

SHEET TITLE
N E W
ELEVATIONS

SHEET NUMBER
A-5

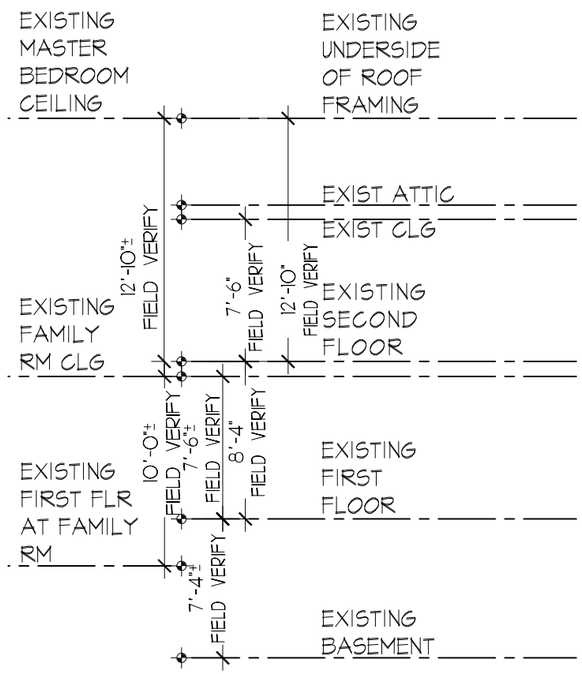

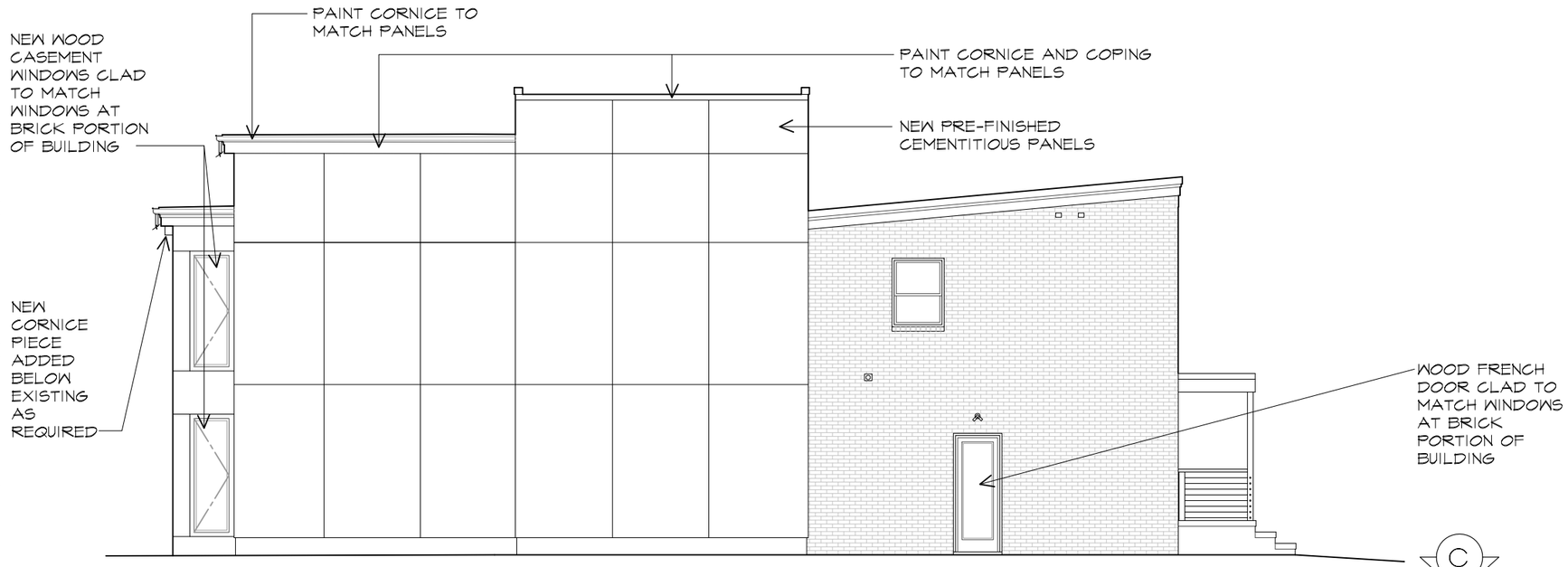

D NEW SIDE NORTH ELEVATION
1/8"=1'-0"

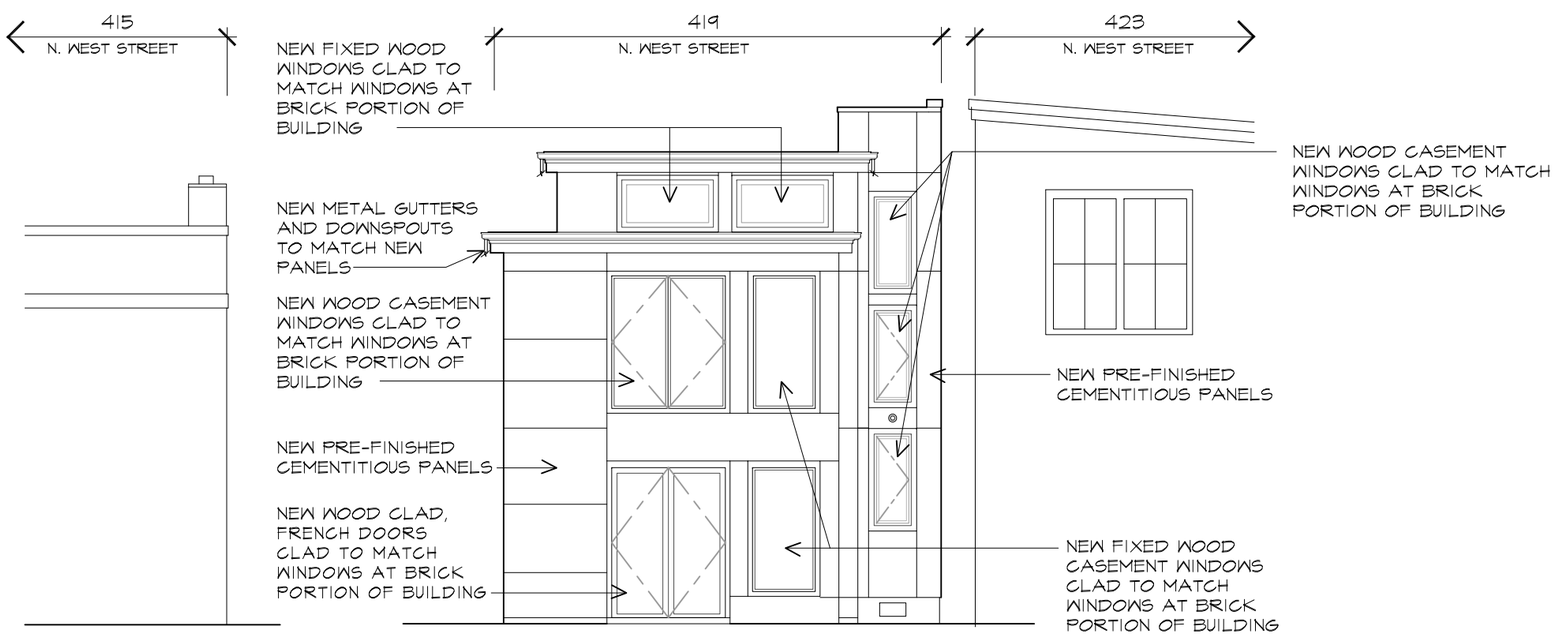

C NEW REAR EAST ELEVATION
1/8"=1'-0"

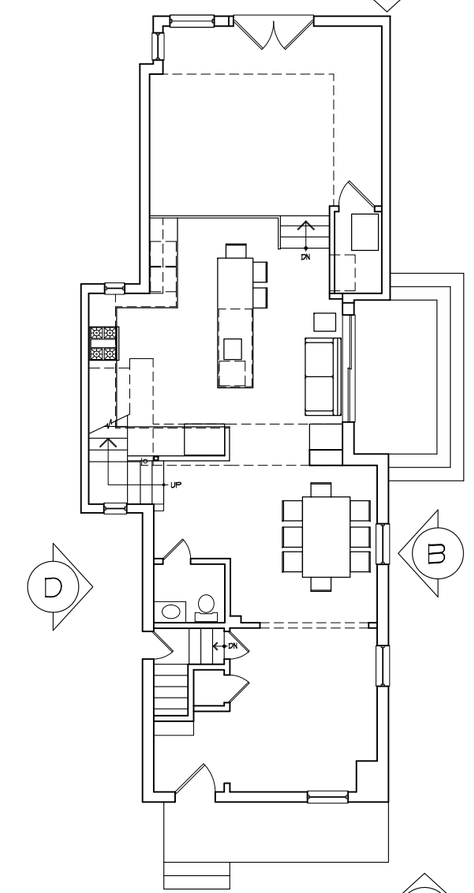

KEY PLAN

PASTEUR DESIGNS
9303 IRVING STREET
MANASSAS, VA
20110-5110
E-MAIL • lucy@pasteurdesigns.com
TELEPHONE • 703 393 8706
FACSIMILE • 703 393 8706

MARKS-WOODS CONSTRUCTION SERVICES

ALMOND RESIDENCE
419 N WEST STREET
ALEXANDRIA VIRGINIA

ISSUE DATE
DESIGN
12/16/21
02/03/22
02/17/22
02/25/22
02/26/22

BAR
05/02/22

SHEET TITLE
NEW ELEVATIONS

SHEET NUMBER
A-6

C NEW REAR EAST ELEVATION
1/8"=1'-0"

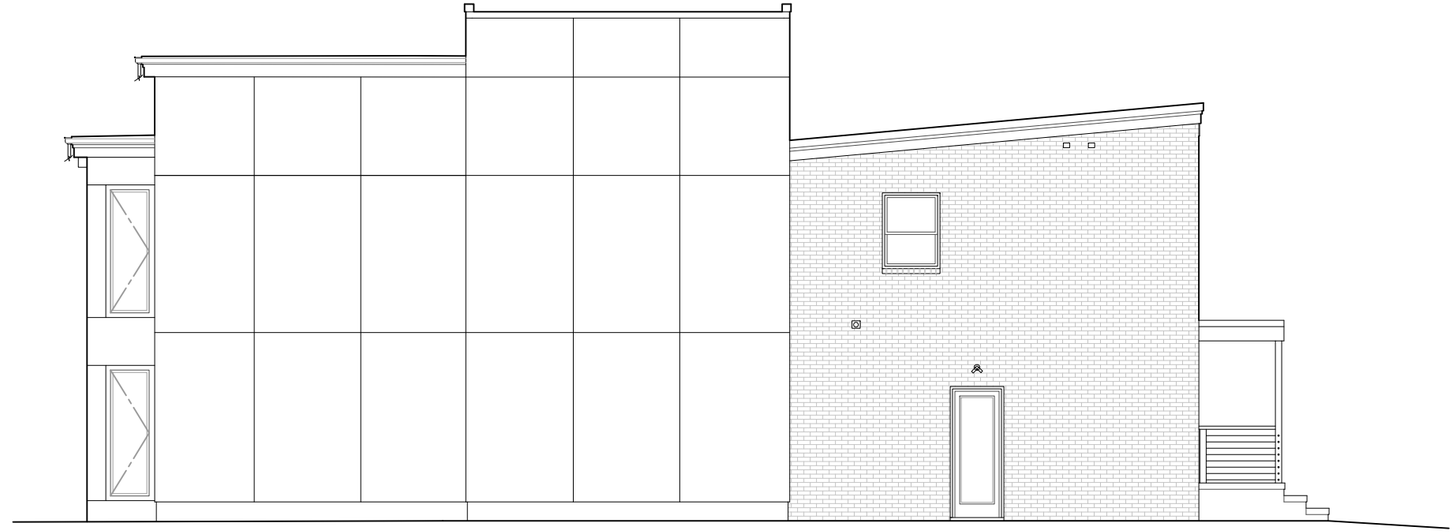

D NEW SIDE NORTH ELEVATION
1/8"=1'-0"

ELEVATIONS SHOWN WITHOUT NOTES FOR CLARITY

B NEW SIDE SOUTH ELEVATION
1/8"=1'-0"

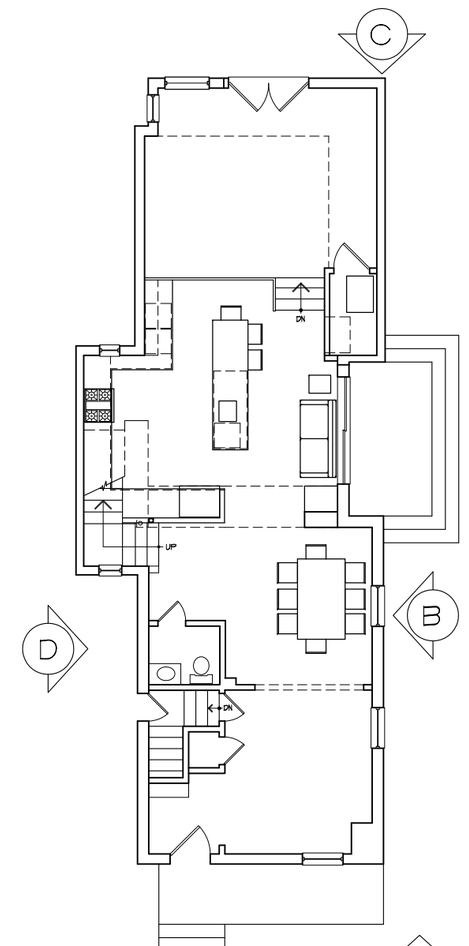

KEY PLAN

PASTEUR DESIGNS
9303 IRVING STREET
MANASSAS VA
20110-5110
E-MAIL • lucy@pasteurdesigns.com
TELEPHONE • 703 393 8706
FACSIMILE • 703 393 8706

MARKS WOODS CONSTRUCTION SERVICES

ALMOND RESIDENCE
419 N WEST STREET
ALEXANDRIA VIRGINIA

ISSUE DATE
DESIGN
12/16/21
02/03/22
02/17/22
02/25/22
02/26/22

BAR
05/02/22

SHEET TITLE
NEW ELEVATIONS

SHEET NUMBER
A-7

FRONT WEST ELEVATION
419 N WEST STREET

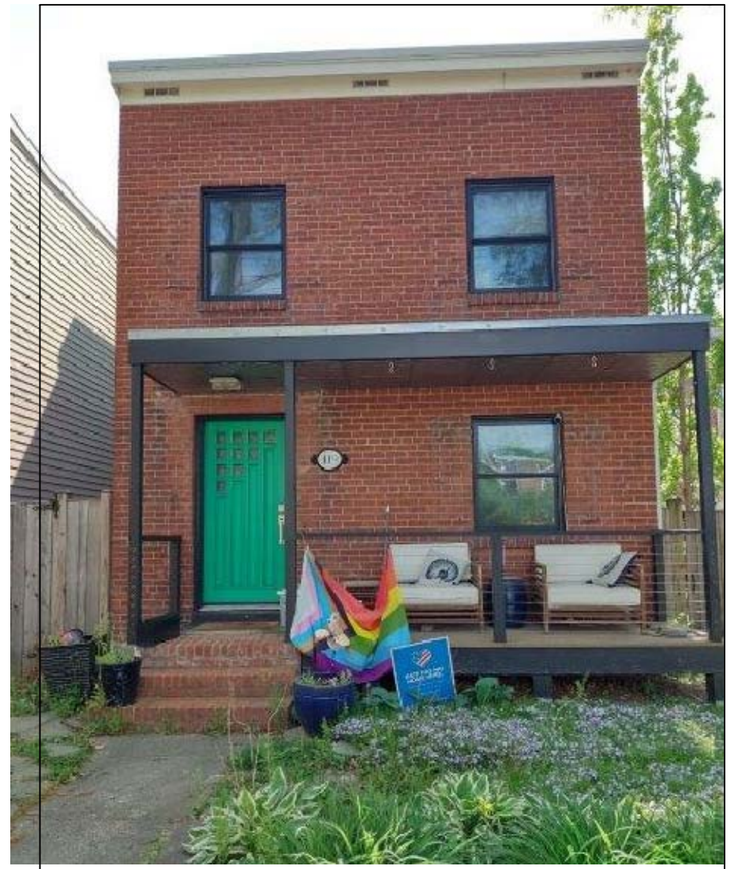

FRONT WEST ELEVATION
419 N WEST STREET

FRONT WEST ELEVATION
419 N WEST STREET

FRONT WEST ELEVATION
419 N WEST STREET

20

FRONT ELEV

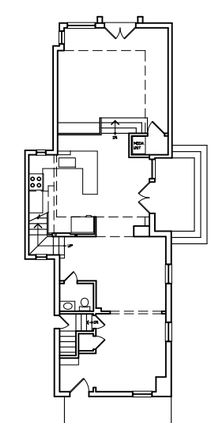

KEY PLAN
NTS

PASTEUR DESIGNS
9303 IRVING STREET
MANASSAS VA
20110-5110
E-MAIL • lucy@pasteurdesigns.com
TELEPHONE • 703 393 8706
FACSIMILE • 703 393 8706

MARKS WOODS CONSTRUCTION SERVICES

ALMOND RESIDENCE
419 N WEST STREET
ALEXANDRIA VIRGINIA

ISSUE DATE
DESIGN
12/16/21
02/03/22
02/17/22
02/25/22
02/26/22

BAR
05/02/22

SHEET TITLE
PHOTOS

SHEET NUMBER
A-8

SIDE SOUTH ELEVATION

SIDE SOUTH ELEVATION

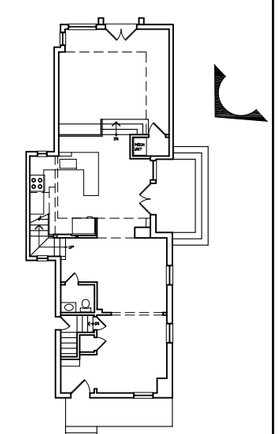

KEY PLAN
NTS

PASTEUR DESIGNS
9303 IRVING STREET
MANASSAS VA
20110-5110
E-MAIL • lucy@pasteurdesigns.com
TELEPHONE • 703 393 8706
FACSIMILE • 703 393 8706

MARKS-WOODS CONSTRUCTION SERVICES

ALMOND RESIDENCE
419 N WEST STREET
ALEXANDRIA VIRGINIA

ISSUE DATE
DESIGN
12/16/21
02/03/22
02/17/22
02/25/22
02/26/22

BAR
05/02/22

SHEET TITLE
PHOTOS

SHEET NUMBER
A-9

REAR EAST ELEVATION
419 N WEST STREET

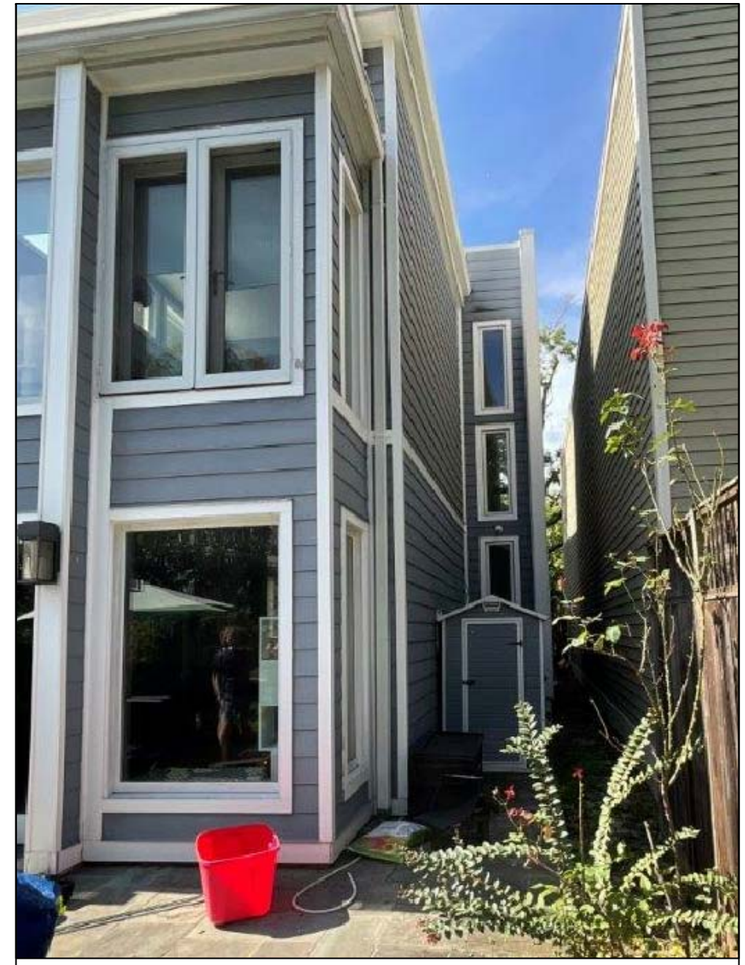

SIDE NORTH ELEVATION
419 N WEST STREET

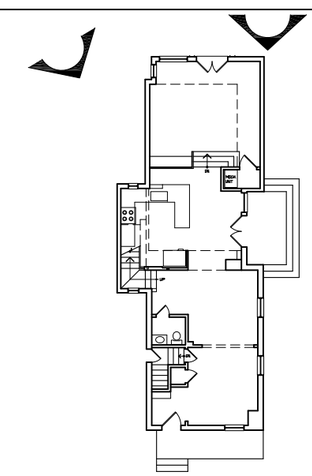

KEY PLAN
NTS

PASTEUR DESIGNS
9303 IRVING STREET
MANASSAS VA
20110-5110
E-MAIL • lucy@pasteurdesigns.com
TELEPHONE • 703 393 8706
FACSIMILE • 703 393 8706

MARKS WOODS CONSTRUCTION SERVICES

ALMOND RESIDENCE
419 N WEST STREET
ALEXANDRIA VIRGINIA

ISSUE DATE
DESIGN
12/16/21
02/03/22
02/17/22
02/25/22
02/26/22

BAR
05/02/22

SHEET TITLE
PHOTOS

SHEET NUMBER
A-10

JamesHardie™

TECHNICAL DATA SHEET

Effective Feb 2022

Hardie® Architectural Panels

All national, state, and local building code requirements must be followed and where they are more stringent than the Hardie® Textured Panels installation requirements, state and local requirements will take precedence.

Document Scope

This document applies to the following Hardie® Architectural Panel- Fine Sand, Hardie® Architectural Panel- Fine Sand-Grooved, Architectural Panel- Mounded Sand, Architectural Panel- Sea Grass, and Architectural Panel- Sculpted Clay. The use of this product is limited to buildings not exceeding 85 feet in height.

General Description

Hardie® Architectural Panels are non-combustible fiber-cement panel, manufactured by James Hardie Building Products Inc.

Product Dimensions

Thickness –0.3125 inches Length – 96, 120, & 144 inches Width – 48 inches Vertical Joint – Shiplap

Product Composition

Hardie® Architectural Panels are *Grade II, Type A,* fiber-cement sheets as defined by ASTM C 1186. The panels are manufactured by the Hatschek process and cured by high pressure steam autoclaving.

Code Compliance

Hardie® Architectural Panels complies with:

- *The 2009, 2012, and 2015 International Building Code® (IBC) Section 1404.10, 2018 and 2021 International Building Code® (IBC) Section 1403.10 and 2009, 2012, 2015, 2018, and 2021 International Residential Code® (IRC) Table R703.3(1) and Section R703.10.1 as ASTM C 1186 Grade II, Type A Fiber Cement.*
- The *2017 and 2020 Florida Building Code® (FBC) Section 1404.10 and 1405.16 as ASTM C 1186 Grade II, Type A Fiber Cement.*

Wind Design:

- Design Tables 2 & 3 provide allowable capacity in mph for transverse load conditions for the Hardie® Architectural Panels attached to either wood framing, furring or WSP, tested in accordance to ASTM E 330.
- Wood framing shall have a specific gravity of 0.42 or greater unless otherwise stated.
- Wood Structural Sheathing (WSP) panel must have a specific gravity of 0.50 or higher unless otherwise stated.

Fire Characteristics:

- Hardie® Architectural Panels are classified as non-combustible when tested in accordance with ASTM E136.
- Hardie® Architectural Panels may be used in ASTM E119 fire resistance rated assemblies as listed by Warnock Hersey.
- Hardie® Architectural Panels are a Class A material according to *2017 and 2020 FBC, 2018 and 2021 IBC Section 803.1.2; Surface Burning Characteristics* when tested in accordance with ASTM E 84: Flame Spread Index = 0 and Smoke Developed Index = 0.
- The building official reserves the right to approve alternate materials, design and methods of construction based on research reports and/or tests based on *2018 IBC, 2017 & 2020 FBC Section 104.11*.

Installation Requirements

- Test reports can be furnished to the building official upon request, contact your local James Hardie sales representative.
- Hardie® Architectural Panels shall be installed on exterior walls braced in accordance with the applicable building code.
- A water-resistive barrier complying with *Section R703.2 of the IRC or Section 1403.2 of the FBC* is required to be installed.
- Install the Hardie® Architectural Panels in accordance with this report and the James Hardie published installation requirements. For a copy contact your local James Hardie sales representative or visit www.JamesHardiePros.com.

Table 1, Hardie® Architectural Panels ASTM C 1186 Physical Properties and Supplementary Requirements

	ASTM Test Method	General Property	Unit or Characteristic	Requirement	Result
Physical Attributes	ASTM C1185	Dimensional Tolerances	Length Width Thickness Squareness Edge Straightness	± 0.5% or ±1/4in ± 0.5% or ±1/4in ± 0.04 in <1/32 in/ft of length <1/32 in/ft of length	Pass
	ASTM C1185	Density, lb./ft³		As reported	<83
	ASTM C1185	Water Tightness	Physical Observations	No drop formation	Pass
	ASTM C1185	Flexural Strength	Wet conditioned, psi Equilibrium conditioned, psi	>1015 psi >1450 psi	Pass
	ASTM C1185	Warm Water Resistance, Observations	Physical Observations	No visible cracks or structural alteration	Pass
Durability	ASTM C1185	Heat/Rain Resistance	Physical Observations	No visible cracks or structural alteration	Pass
	ASTM C1185	Freeze/Thaw Resistance	Physical Observations Mass Loss, % Freeze/Thaw, % strength retention	No visible cracks or structural alteration ≤ 3.0% ≥ 80%	Pass
Fire Characteristics	ASTM E84	Surface Burning Characteristics	Flame Spread Index (FSI) Smoke Developed Index (SDI) Fuel Contributed International Building Code®	As reported	0 0 0 A
	ASTM E136	Non-combustibility		As reported	Pass

JamesHardie™ **TECHNICAL DATA SHEET** Effective Feb 2022

Hardie® Architectural Panels

All national, state, and local building code requirements must be followed and where they are more stringent than the Hardie® Textured Panels installation requirements, state and local requirements will take precedence.

Table 2, Wind Design Table, Exposed Fastening

Allowable Wind Speed (mph) for Hardie® Architectural Panels (Analytical Method in ASCE 7-10, 7-16 Chapter 30)

								2017 & 2020 FBC, 2012 & 2015 IBC, 2015 & 2018 IRC (Ultimate Design Wind Speed, Vult),5,9 2018 IBC (Basic Design Wind Speed, V)[11]			2006, 2009 & 2012 IRC 2006 & 2009 IBC (Nominal Design Wind Speed, V_{asd})[4,10,12,13]		
								Wind exposure category			Wind exposure category		
Product[1]	Minimum Thickness (in.)	Fastener Type	Fastener Spacing	Frame Type	Stud Spacing (in.)	Allowable Design load (psf)	Building Height (ft.)[2,3]	B	C	D	B	C	D
Hardie® Architectural Panel[1]	5/16	16 Gauge, 1 1/2" long, stainless Finish Nail	4 inches along studs	2X4 wood[6]	16	33.8	0-15	153	139	126	119	108	98
							20	153	135	123	119	105	95
							40	147	126	116	114	97	90
							60	139	120	112	108	93	87
Hardie® Architectural Panel[1]	5/16	16 Gauge, 1 1/2" long, stainless Finish Nail	4 inches along studs	2X4 wood[7]	16	37.0	0-15	160	145	132	124	113	102
							20	160	141	129	124	109	100
							40	154	131	121	119	102	94
							60	145	126	117	113	98	91
Hardie® Architectural Panel[1]	5/16	16 Gauge, 1.25" long, stainless Finish Nail	4 inches o.c. vertically along furring strips spaced at 16 inches o.c., min. 3/8" from edge of siding	2x4 wood or 20 ga. (33 mils) steel framing with ¾" thick by 3.5" wide WSP furring (SG=0.50)[14]	16	27.7	0-15	139	126	114	107	97	89
							20	139	122	112	107	95	86
							40	133	114	105	103	88	81
							60	126	109	101	97	85	78
Hardie® Architectural Panel[1]	5/16	16 Gauge, 1.25" long, stainless Finish Nail	4 inches o.c. vertically along furring strips spaced at 16 inches o.c., min. 3/8" from edge of siding	2x4 wood or 20 ga.(33 mils) steel framing with ¾" by3.5" wide SPF furring (SG=0.42)[14]	16	21.4	0-15	122	110	100	94	85	78
							20	122	107	-	94	83	-
							40	117	-	-	90	-	-
							60	110	-	-	85	-	-

1. Installation must be in accordance with manufacturer's installation instructions
2. Building heights are the mean roof height (ft) of a building except the eave height shall be used for the roof angles of less than or equal to 10° (2-12 roof slope)
3. Linear interpolation of building height (≤ 60ft) and wind speed is permitted.
4. Wind speed design coefficient assumptions per Analytical Method in ASCE 7-05: I=1, K_{zt}=1, K_d=0.85, GC_p= -1.4, GC_{pi}= -0.18
5. Wind speed design assumptions per Analytical Method in ASCE 7-10 &ACE 7-16 Section 30.4: K_{zt}=1, K_d=0.85, GC_p= -1.4, GC_{pi}= 0.18
6. Wood framing species must have a specific gravity of 0.42 gravity or higher.
7. Wood framing species must have a specific gravity of 0.46 gravity or higher.
8. Wood Structural Sheathing panel must have a specific gravity of 0.50 or higher.
9. V_{ult} = ultimate design wind speed.
10. V_{asd} = nominal design wind speed.
11. V = basic design wind speed
12. Basic Design Wind Speed per ASCE 7-16 or 2017 FBC/2018 IBC Figures 1609.3(1) through 1609.3(8). Where design is based on the fastest mile wind speeds, the basic wind speed shall be converted to the fastest mile wind speed V_{fm} per Section R301.2.1.3 of the 2012 IRC.
13. 2017 & 2020 FBC, 2018 IBC Section 1609.3.1 Eq. 16-33, Vasd = Vult $(0.6)^{0.5}$
14. The NDS published specific gravities of SPF lumber & Wood Structural Panel (WSP) furring are 0.42 and 0.50 respectively. Attachment of the furring to the structural framing must be determine by the project design engineer to resist the allowable design wind loads for the maximum wind speeds as tabulated.

Hardie® Architectural Panels

All national, state, and local building code requirements must be followed and where they are more stringent than the Hardie® Textured Panels installation requirements, state and local requirements will take precedence.

Table 3, Wind Design Table, Off-Stud Nailing Application

Allowable Wind Speed (mph) for Hardie® Textured Panels (Analytical Method in ASCE 7-10, 7-16 Chapter 30)

								2017 & 2020 FBC, 2012 & 2015 IBC, 2015 & 2018 IRC (Ultimate Design Wind Speed, Vult),5,9 2018 IBC (Basic Design Wind Speed, V)[11]			2006, 2009 & 2012 IRC 2006 & 2009 IBC (Nominal Design Wind Speed, V_{asd})[4,10,12,13]		
								Wind exposure category			Wind exposure category		
Product[1]	Minimum Thickness (in.)	Fastener Type	Fastener Spacing	Frame Type	Stud Spacing (in.)	Allowable Design load (psf)	Building Height (ft.)[2,3]	B	C	D	B	C	D
Hardie® Architectural Panel[1]	5/16	16 Gauge, 1 1/2" long, stainless Finish Nail	4 inches along studs & panel edges. See figure 1	2X4 wood[7] with min 7/16″ Wood Structural Panel[9] Sheathing attached per code	16	42.7	0-15	172	156	142	133	121	110
							20	172	152	138	133	117	107
							40	165	141	130	128	109	101
							60	156	135	126	121	105	97
Hardie® Architectural Panel[1]	5/16	16 Gauge, 1 1/2" long, stainless Finish Nail	4 inches along studs & panel edges. See figure 2	2X4 wood[8] with min 7/16″ Wood Structural Panel[9] Sheathing attached per Code	24	31.2	0-15	147	133	121	114	103	94
							20	147	130	118	114	100	92
							40	141	121	111	109	93	86
							60	133	116	-	103	90	-
Hardie® Architectural Panel[1]	5/16	16 Gauge, 1 1/2" long, stainless Finish Nail	4 inches along studs & panel edges. See figure 2	2X4 wood[7] with min 7/16″ Wood Structural Panel[9] Sheathing attached per code	24	28.0	0-15	139	126	115	108	98	89
							20	139	123	112	108	95	87
							40	134	114	-	104	89	-
							60	126	-	-	98	-	-

1. Applies to Hardie® Architectural Panel – Fine Sand, Hardie® Architectural Panel – Mounded Sand, Hardie® Architectural Panel – Sea Grass, Hardie® Architectural Panel – Sculpted Clay only.
2. Installation must be in accordance with manufacturer's installation instructions
3. Building heights are the mean roof height (ft) of a building except the eave height shall be used for the roof angles of less than or equal to 10° (2-12 roof slope)
4. Linear interpolation of building height (≤ 60ft) and wind speed is permitted.
5. Wind speed design coefficient assumptions per Analytical Method in ASCE 7-05: I=1, Kzt=1, Kd=0.85, GCp= -1.4, GCpi= -0.18
6. Wind speed design assumptions per Analytical Method in ASCE 7-10 &ACE 7-16 Section 30.4: Kzt=1, Kd=0.85, GCp= -1.4, GCpi= 0.18
7. Wood framing species must have a specific gravity of 0.42 gravity or higher.
8. Wood framing species must have a specific gravity of 0.46 gravity or higher.
9. Wood Structural Sheathing panel must have a specific gravity of 0.50 or higher.
10. Vult = ultimate design wind speed.
11. Vasd = nominal design wind speed.
12. V = basic design wind speed
13. Basic Design Wind Speed per ASCE 7-16 or 2017 FBC/2018 IBC Figures 1609.3(1) through 1609.3(8). Where design is based on the fastest mile wind speeds, the basic wind speed shall be converted to the fastest mile wind speed Vfm per Section R301.2.1.3 of the 2012 IRC.
14. 2017 & 2020 FBC, 2018 IBC Section 1609.3.1 Eq. 16-33, Vasd = Vult(0.6)0.5

Hardie® Architectural Panels

All national, state, and local building code requirements must be followed and where they are more stringent than the Hardie® Textured Panels installation requirements, state and local requirements will take precedence.

Figure 1, Fastening Configuration for 16" O.C. Wood Frame: Off-Stud Application

- 4 in o.c. along studs
- 4 in o.c. along panel edges
  - Edges may be attached to WSP sheathing only

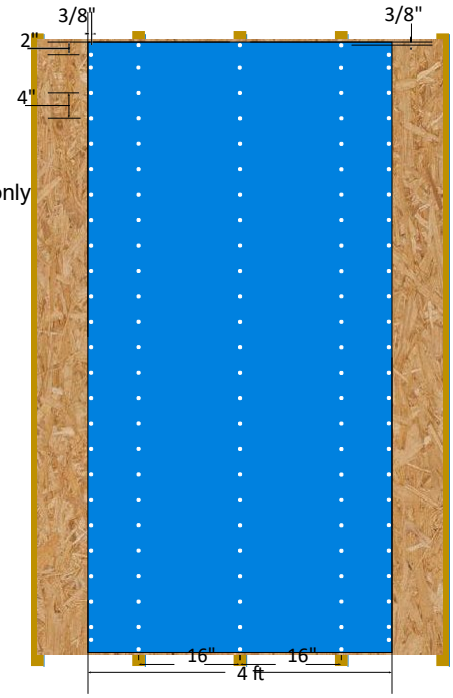

Figure 2, Fastening Configuration for 24" O.C. Wood Frame: Off-Stud Application

- 4 in o.c. along studs
- 4 in o.c. along panel edges
  - Edges may be attached to WSP sheathing only

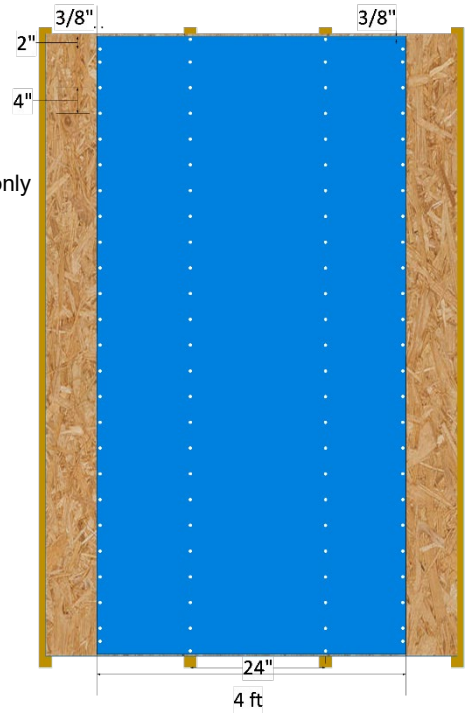

STATEMENT COLLECTION™ COLORS


Arctic White


Cobble Stone


Navajo Beige

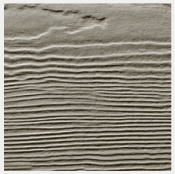
Monterey Taupe


Khaki Brown

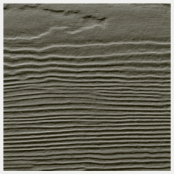
Timber Bark


Pearl Gray

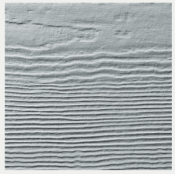
Light Mist

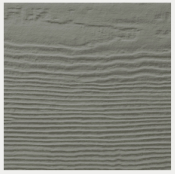
Gray Slate

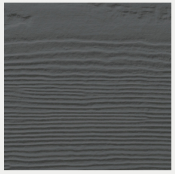
Night Gray

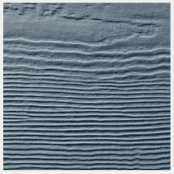
Boothbay Blue

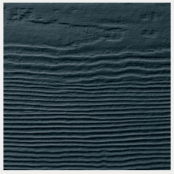
Evening Blue

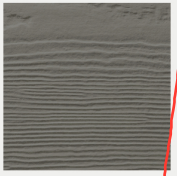
Aged Pewter

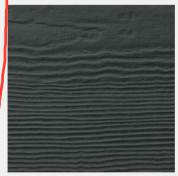
Iron Gray

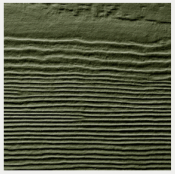
Mountain Sage

Supporting documents for this product:

Test Reports:
https://media.pella.com/professional/adm/CertificationReports/Test_Reports_AS-Clad.pdf

CSI Specs (readable using Microsoft Word or other text editing application):
https://media.pella.com/professional/adm/Wood-CSI_Specs/08551-PRC.rtf

AIA Masterspec (readable using Microsoft Word or other text editing application):
https://media.pella.com/professional/adm/Wood-CSI_Specs/Masterspec/08550FL_finished.rtf

Detailed Product Description (readable using Microsoft Word or other text editing application):
https://media.pella.com/professional/adm/Clad-Wood/PRC-Casement-C.rtf

Size Tables (requires appropriate CAD software to read and use):
https://media.pella.com/professional/adm/Clad-Wood/PRC-CM-Elev_D.dwg

CAD cross sections (requires appropriate CAD software to read and use):
https://media.pella.com/professional/adm/Clad-Wood/PRC-CM-Detail_D.dwg

3D & BIM (requires appropriate software to read and use):
https://media.pella.com/professional/adm/RevitFiles/PR-Revit/Window-Casement-Pella-Reserve-Contemporary.zip

Sketchup (requires appropriate software to read and use):
https://media.pella.com/professional/adm/Clad-Wood-ASC/PellaSKP_PellaReserve_Contemporary_Casement.zip

Combination Recommendations:
https://media.pella.com/professional/adm/Clad-Wood/D_Combinations.pdf

Installation Details:
https://media.pella.com/professional/adm/Clad-Wood/F_InstallationDetails.pdf

Impact-Resistant Casement, Complete Product Information:
https://media.pella.com/professional/adm/Clad-Wood/Pella-ImpactResistant_Casement.pdf

Impact-Resistant CAD cross sections (requires appropriate CAD software to read and use):
https://media.pella.com/professional/adm/Clad-Wood/PRC-CM-HiGDetail_D.dwg

Pella® Reserve™ Contemporary Casement Window

Size and Performance Data

	Rectangular and Angled Shapes
Sizes	
Standard vent/fixed sizes	●
Standard fixed companion sizes	●
Egress sizes	●
Special sizes available	●
Performance [1]	
Meets or Exceeds AAMA/WDMA Ratings	R30 - CW50 Hallmark Certified
Air Infiltration (cfm/ft^2 of frame @ 1.57 psf wind pressure)	0.05
Water Resistance	7.5 psf
Design Pressure	30 - 50 psf
Other Performance Criteria	
Forced Entry Resistance Level (Minimum Security Grade) [2]	10
Operating Force (lb) Initiate Motion / Maintain Motion (of Hallmark tested size and glazing) [3]	15/6

Sound Transmission Class / Outdoor-Indoor Transmission Class

Product	Frame Size Tested [3]	Glazing System				STC Rating	OITC Rating
		Overall Glazing Thickness	Exterior Glass Thickness	Interior Glass Thickness	Third Pane Thickness		
Contemporary Clad Window	**Vent with No Grilles**						
	23" x 59"	11/16"	2.5mm	2.5mm	–	26	23
	23" x 59"	11/16"	5mm	3mm	–	31	26
	23" x 59"	11/16"	3mm	6.0mm PVB	–	34	28
	Fixed with No Grilles						
	47" x 59"	11/16"	3mm	3mm	–	28	24
	47" x 59"	11/16"	5mm	3mm	–	31	26
	47" x 59"	11/16"	3mm	6.0mm PVB	–	33	29

(–) = Not Applicable
(1) Maximum performance for single unit when glazed with the appropriate glass thickness. Values shown are for standard and special sizes. Contact your local sales representative for complete information.
(2) The higher the level, the greater the product's ability to resist forced entry.
(3) Glazing configurations may result in higher operational forces.
(4) ASTM E 1425 defines standard sizes for acoustical testing. Ratings achieved at that size are representative of all sizes of the same configuration.
NOTE: Performance with additional options may not be the same as Standard and Special size units. Please contact your local Pella representative for complete information.

Pella® Reserve™ Contemporary Casement Window

Features and Options

Standard	Options / Upgrades
Glazing	
Glazing Type	
Dual-Pane Insulating Glass	Triple-Pane Insulating Glass
Insulated Glass Options/Low-E Types	
Advanced Low-E	SunDefense™ Low-E
	AdvancedComfort Low-E
	NaturalSun Low-E
	Clear (no Low-E coating)
Additional Glass Options	
Annealed Glass	Tempered Glass
	Obscure Glass [1]
	Tinted Glass (Bronze, Gray and Green)
	Noise reduction glass (5mm/3mm or 4mm/6mm combination)
	Noise reduction laminated glass (non-impact)
Gas Fill/High Altitude	
Argon	Krypton [2]
	High altitude
	High Altitude with Argon [3]
Wood Types	
Pine	Mahogany, Douglas Fir
Exterior	
Exterior Sash Profile	
Square	–
Exterior Finish	
EnduraClad® protective finish	EnduraClad Plus protective finish
Cladding Colors [1]	
Standard colors	Feature Colors, Custom Colors
Interior	
Interior Sash Profile	
Square	–
Interior Finish	
Unfinished wood	Factory primed [4] , Factory prefinished paint [4] , Factory prefinished stain
Hardware	
Hardware Type	
Wash hinge Hardware	Side Pivot
Hardware Style	
Saldo, Fold-Away crank	–
Hardware Finishes	
Champagne, White, Brown or Matte Black	Satin Brass, Satin Nickel, Oil-Rubbed Bronze, Polished Chrome
Sash Locks	
SureLock® System, Unison Lock System [5]	–
Grilles	
Integral Light Technology® Grilles	
–	Traditional, Prairie, Top Row, Cross, Custom
Grilles-Between-the-Glass	
–	Traditional, Prairie, Top Row [1], Cross, Custom-Equally Divided
Screens	
–	InView™ screens

(1) Contact your local Pella sales representative for current designs and color options.
(2) Only available for Architect Series products with triple glazing. Not available with high altitude glazing.
(3) Available with Low-E argon-insulated glass only.
(4) Not available on Mahogany and Douglas Fir interiors.
(5) Unit height determines availability.

Combination Assemblies

Combinations are a great way to create visual interest in any project. A combination is an assembly formed by two or more separate windows or doors whose frames are mulled together by a combination or reinforcing mullion.

Pella window combinations are available in an endless variety of arrangements. Below are some examples available factory-assembled combinations. See the Combinations Recommendations document for typical mullions, requirements and limitations.

Contact your local Pella sales representative for more information.

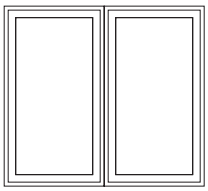
Two-Wide

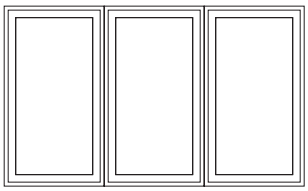
Three-Wide Equal

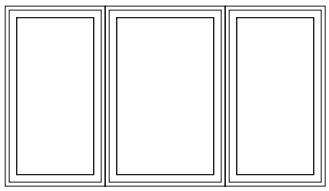
Three-Wide Unequal

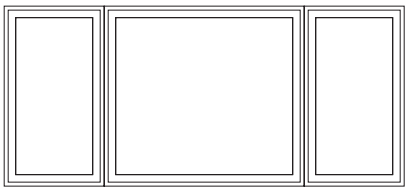
Center Fixed with Flankers

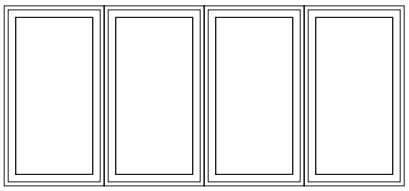
Four-Wide

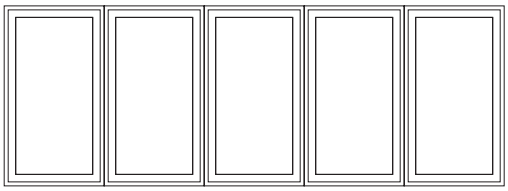
Five-Wide

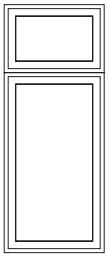
Transom over Single

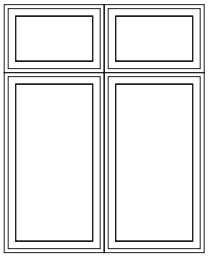
Two-Wide Transom over Two-Wide

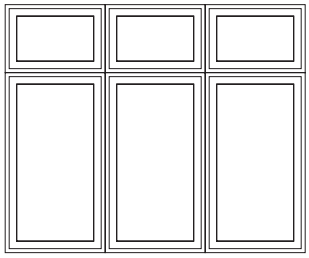
Three-Wide Transom over Three-Wide

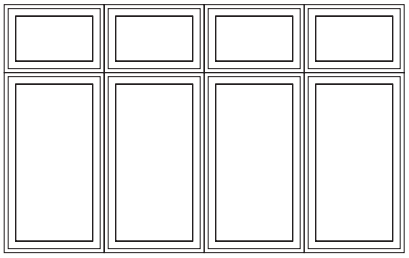
Four-Wide Transom over Four-Wide

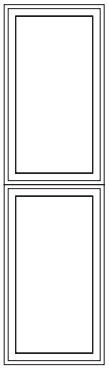
Two-High

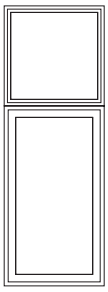
Clad Frame over Single

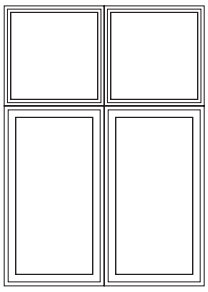
Two-Wide Clad Frame over Two-Wide

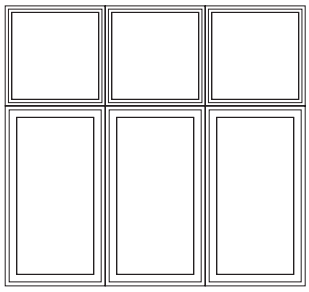
Three-Wide Clad Frame over Three-Wide

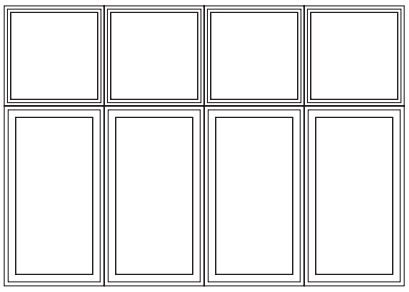
Four-Wide Clad Frame over Four-Wide

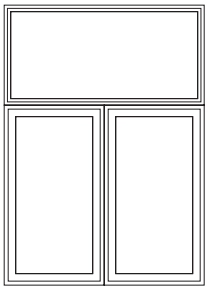
Single Clad Frame over Two-Wide

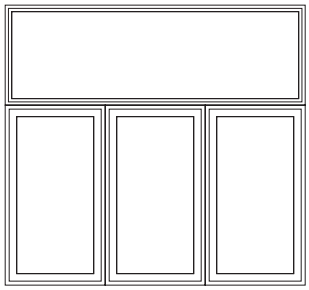
Single Clad Frame over Three-Wide

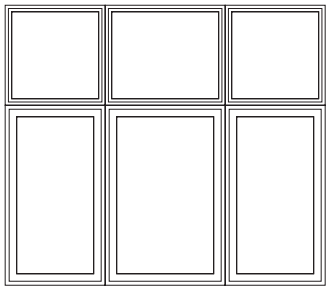
Three-Wide Clad Frame over Three-Wide Unequal

Pella® Reserve™ Contemporary Casement Window

Glazing Performance - Total Unit

Glazing Thickness	Type of Glazing	NFRC Certified Product #	Glass (mm) Ext.	Glass (mm) Int.	Gap Fill	Performance Values 1 U-Factor	SHGC	VLT %	CR	Shaded Areas Meet ENERGY STAR® Performance Criteria in Zones Shown: U. S. Zone N	NC	SC	S	Canada 2 ER	CA
Vent Dual-Pane Glazing - Aluminum-Clad Exterior															
11/16"	Clear IG	PEL-N-11-21566-00001	3	3	air	0.44	0.53	0.56	44						
	with grilles-between-the-glass	PEL-N-11-21757-00001				0.44	0.49	0.51	44						
	with integral grilles	PEL-N-11-21764-00001				0.44	0.49	0.51	44						
11/16"	Advanced Low-E IG	PEL-N-11-21561-00002	3	3	argon	0.28	0.26	0.48	62		NC				
	with grilles-between-the-glass	PEL-N-11-21749-00002				0.28	0.24	0.43	61		NC	SC	S		
	with integral grilles	PEL-N-11-21752-00002				0.29	0.24	0.43	62		NC	SC	S		
11/16"	SunDefense™ Low-E IG	PEL-N-11-21562-00002	3	3	argon	0.28	0.19	0.44	62		NC	SC	S		
	with grilles-between-the-glass	PEL-N-11-21750-00002				0.28	0.18	0.40	62		NC	SC	S		
	with integral grilles	PEL-N-11-21753-00002				0.28	0.18	0.40	62		NC	SC	S		
11/16"	AdvancedComfort Low-E IG	PEL-N-11-21565-00001	3	3	argon	0.25	0.25	0.47	48	N	NC	SC	S		
	with grilles-between-the-glass	PEL-N-11-21756-00001				0.25	0.23	0.42	48	N	NC	SC	S		
	with integral grilles	PEL-N-11-21763-00001				0.27	0.23	0.42	48	N	NC	SC	S		
11/16"	NaturalSun Low-E IG	PEL-N-11-21563-00002	3	3	argon	0.29	0.47	0.54	61	N					
	with grilles-between-the-glass	PEL-N-11-21751-00002				0.29	0.43	0.49	61	N					
	with integral grilles	PEL-N-11-21754-00002				0.29	0.43	0.49	61	N					
Vent Dual-Pane Tinted Glazing															
11/16"	Bronze Advanced Low-E IG	PEL-N-11-21603-00001	5	3	argon	0.29	0.23	0.31	60		NC	SC	S		
	with grilles-between-the-glass	PEL-N-11-21833-00001				0.30	0.21	0.28	60		NC	SC	S		
	with integral grilles	PEL-N-11-21839-00001				0.30	0.21	0.28	60		NC	SC	S		
11/16"	Gray Advanced Low-E IG	PEL-N-11-21604-00001	5	3	argon	0.29	0.21	0.26	60		NC	SC	S		
	with grilles-between-the-glass	PEL-N-11-21834-00001				0.30	0.19	0.24	60		NC	SC	S		
	with integral grilles	PEL-N-11-21840-00001				0.30	0.19	0.24	60		NC	SC	S		
11/16"	Green Advanced Low-E IG	PEL-N-11-21605-00001	5	3	argon	0.29	0.26	0.42	60		NC				
	with grilles-between-the-glass	PEL-N-11-21835-00001				0.30	0.24	0.38	60		NC	SC	S		
	with integral grilles	PEL-N-11-21841-00001				0.30	0.24	0.38	60		NC	SC	S		
Vent Dual-Pane High Altitude Glazing															
11/16"	Advanced Low-E IG	PEL-N-11-21567-00001	3	3	air	0.31	0.26	0.48	57						
	with grilles-between-the-glass	PEL-N-11-21758-00001				0.32	0.24	0.43	57				S		
	with integral grilles	PEL-N-11-21765-00001				0.32	0.24	0.43	57				S		
11/16"	SunDefense Low-E IG	PEL-N-11-21568-00001	3	3	air	0.31	0.20	0.44	58				S		
	with grilles-between-the-glass	PEL-N-11-21759-00001				0.32	0.18	0.40	58				S		
	with integral grilles	PEL-N-11-21766-00001				0.32	0.18	0.40	58				S		
11/16"	AdvancedComfort Low-E IG	PEL-N-11-21570-00001	3	3	air	0.27	0.25	0.47	44	N	NC	SC	S		
	with grilles-between-the-glass	PEL-N-11-21761-00001				0.28	0.23	0.42	44		NC	SC	S		
	with integral grilles	PEL-N-11-21768-00001				0.29	0.23	0.42	44		NC	SC	S		
11/16"	NaturalSun Low-E IG	PEL-N-11-21569-00001	3	3	air	0.32	0.47	0.54	57						
	with grilles-between-the-glass	PEL-N-11-21760-00001				0.33	0.43	0.49	57						
	with integral grilles	PEL-N-11-21767-00001				0.33	0.43	0.49	57						

R-Value = 1/U-Factor
SHGC = Solar Heat Gain Coefficient
VLT % = Visible Light Transmission
CR = Condensation Resistance
ER = Canadian Energy Rating

(1) Glazing performance values are calculated for Pine using NFRC 100, NFRC 200 and NFRC 500. Thermal performance of other wood species may vary. ENERGY STAR® values are updated to 2016 (Version 6) criteria.
(2) The values shown are based on Canada's updated ENERGY STAR® 2020 initiative.
Based on unit size, some products will use 2.5 mm glass that will have equivalent or improved performance from what is shown.
See the Product Performance section for more detailed information or visit www.energystar.gov for Energy Star guidelines.

Climate Zones

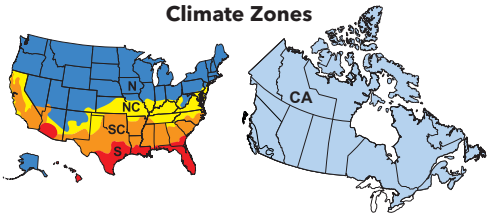

Pella® Reserve™ Contemporary Casement Window

Glazing Performance - Total Unit

Glazing Thickness	Type of Glazing	NFRC Certified Product #	Glass (mm)		Gap Fill	Performance Values 1				Shaded Areas Meet ENERGY STAR® Performance Criteria in Zones Shown					
			Ext.	Int.		U-Factor	SHGC	VLT %	CR	U. S. Zone				Canada 2 ER	
Fixed Dual-Pane Glazing - Aluminum-Clad Exterior										N	NC	SC	S		CA
11/16"	Clear IG	PEL-N-1-53572-00001	3	3	air	0.45	0.62	0.65	44						
	with grilles-between-the-glass	PEL-N-1-53763-00001				0.46	0.56	0.58	44						
	with integral grilles	PEL-N-1-53770-00001				0.46	0.56	0.58	44						
11/16"	Advanced Low-E IG	PEL-N-1-53567-00002	3	3	argon	0.27	0.30	0.55	62	N	NC				
	with grilles-between-the-glass	PEL-N-1-53755-00002				0.28	0.27	0.50	62		NC				
	with integral grilles	PEL-N-1-53758-00002				0.28	0.27	0.50	62		NC				
11/16"	SunDefense™ Low-E IG	PEL-N-1-53568-00002	3	3	argon	0.26	0.22	0.51	62	N	NC	SC	S		
	with grilles-between-the-glass	PEL-N-1-53756-00002				0.27	0.20	0.46	62	N	NC	SC	S		
	with integral grilles	PEL-N-1-53759-00002				0.27	0.20	0.46	62	N	NC	SC	S		
11/16"	AdvancedComfort Low-E IG	PEL-N-1-53571-00001	3	3	argon	0.23	0.29	0.54	48	N	NC				
	with grilles-between-the-glass	PEL-N-1-53762-00001				0.24	0.26	0.48	48	N	NC				
	with integral grilles	PEL-N-1-53769-00001				0.25	0.26	0.48	48	N	NC				
11/16"	NaturalSun Low-E IG	PEL-N-1-53569-00002	3	3	argon	0.28	0.55	0.63	61	N				37	CA
	with grilles-between-the-glass	PEL-N-1-53757-00002				0.28	0.49	0.56	61	N					
	with integral grilles	PEL-N-1-53760-00002				0.29	0.49	0.56	61	N					
Fixed Dual-Pane Tinted Glazing															
11/16"	Bronze Advanced Low-E	PEL-N-1-53609-00001	5	3	argon	0.28	0.26	0.36	59		NC				
	with grilles-between-the-glass	PEL-N-1-53839-00001				0.29	0.24	0.32	59		NC	SC	S		
	with integral grilles	PEL-N-1-53845-00001				0.29	0.24	0.32	59		NC	SC	S		
11/16"	Gray Advanced Low-E IG	PEL-N-1-53610-00001	5	3	argon	0.28	0.24	0.31	59		NC	SC	S		
	with grilles-between-the-glass	PEL-N-1-53840-00001				0.29	0.22	0.27	59		NC	SC	S		
	with integral grilles	PEL-N-1-53846-00001				0.29	0.22	0.27	59		NC	SC	S		
11/16"	Green Advanced Low-E IG	PEL-N-1-53611-00001	5	3	argon	0.28	0.30	0.49	59		NC				
	with grilles-between-the-glass	PEL-N-1-53841-00001				0.29	0.27	0.43	59		NC				
	with integral grilles	PEL-N-1-53847-00001				0.29	0.27	0.43	59		NC				
Fixed Dual-Pane High Altitude Glazing															
11/16"	Advanced Low-E IG	PEL-N-1-53573-00001	3	3	air	0.31	0.30	0.55	57						
	with grilles-between-the-glass	PEL-N-1-53764-00001				0.32	0.27	0.50	57						
	with integral grilles	PEL-N-1-53771-00001				0.32	0.27	0.50	57						
11/16"	SunDefense Low-E IG	PEL-N-1-53574-00001	3	3	air	0.30	0.22	0.51	57		NC	SC	S		
	with grilles-between-the-glass	PEL-N-1-53765-00001				0.31	0.20	0.46	57				S		
	with integral grilles	PEL-N-1-53772-00001				0.32	0.20	0.46	57				S		
11/16"	AdvancedComfort Low-E IG	PEL-N-1-53576-00001	3	3	air	0.26	0.29	0.54	44	N	NC				
	with grilles-between-the-glass	PEL-N-1-53767-00001				0.27	0.26	0.48	44	N	NC				
	with integral grilles	PEL-N-1-53774-00001				0.28	0.26	0.48	44		NC				
11/16"	NaturalSun Low-E IG	PEL-N-1-53575-00001	3	3	air	0.32	0.54	0.63	56						
	with grilles-between-the-glass	PEL-N-1-53766-00001				0.33	0.49	0.56	56						
	with integral grilles	PEL-N-1-53773-00001				0.33	0.49	0.56	56						

R-Value = 1/U-Factor
SHGC = Solar Heat Gain Coefficient
VLT % = Visible Light Transmission
CR = Condensation Resistance
ER = Canadian Energy Rating

(1) Glazing performance values are calculated for Pine using NFRC 100, NFRC 200 and NFRC 500. Thermal performance of other wood species may vary. ENERGY STAR® values are updated to 2016 (Version 6) criteria.
(2) The values shown are based on Canada's updated ENERGY STAR® 2020 initiative.
Based on unit size, some products will use 2.5 mm glass that will have equivalent or improved performance from what is shown.
See the Product Performance section for more detailed information or visit www.energystar.gov for Energy Star guidelines.

Climate Zones

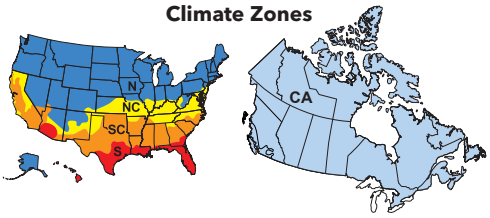

Pella® Reserve™ Contemporary Casement Window

Glazing Performance - Total Unit

Glazing Thickness	Type of Glazing	NFRC Certified Product #	Glass (mm)			Gap Fill	Performance Values 1				Shaded Areas Meet ENERGY STAR® Performance Criteria in Zones Shown					
			Ext.	Mid.	Int.		U-Factor	SHGC	VLT %	CR	U. S. Zone				Canada 2 ER	
Vent Triple-Pane Glazing - Aluminum-Clad Exterior											N	NC	SC	S		CA
1"	Advanced Low-E IG	PEL-N-11-21640-00001	3	3	3	argon	0.22	0.23	0.42	71	N	NC	SC	S	26	
	with grilles-between-the-glass	PEL-N-11-21906-00001					0.22	0.21	0.38	71	N	NC	SC	S	25	
	with integral grilles	PEL-N-11-21915-00001					0.22	0.21	0.38	71	N	NC	SC	S	25	
1"	Advanced Low-E IG	PEL-N-11-21646-00001	3	3	3	Krypton	0.19	0.23	0.42	75	N	NC	SC	S	29	CA
	with grilles-between-the-glass	PEL-N-11-21912-00001					0.19	0.21	0.38	75	N	NC	SC	S	28	CA
	with integral grilles	PEL-N-11-21921-00001					0.19	0.21	0.38	75	N	NC	SC	S	28	CA
1"	SunDefense™ Low-E IG	PEL-N-11-21641-00001	3	3	3	argon	0.22	0.17	0.39	71	N	NC	SC	S	22	
	with grilles-between-the-glass	PEL-N-11-21907-00001					0.22	0.16	0.35	71	N	NC	SC	S	22	
	with integral grilles	PEL-N-11-21916-00001					0.22	0.16	0.35	71	N	NC	SC	S	22	
1"	SunDefense™ Low-E IG	PEL-N-11-21647-00001	3	3	3	Krypton	0.19	0.17	0.39	75	N	NC	SC	S	26	CA
	with grilles-between-the-glass	PEL-N-11-21913-00001					0.19	0.16	0.35	75	N	NC	SC	S	25	CA
	with integral grilles	PEL-N-11-21922-00001					0.19	0.16	0.35	75	N	NC	SC	S	25	CA
1"	NaturalSun Low-E IG	PEL-N-11-21639-00001	3	3	3	argon	0.22	0.39	0.47	70	N	NC			35	CA
	with grilles-between-the-glass	PEL-N-11-21905-00001					0.22	0.35	0.43	70	N	NC			33	
	with integral grilles	PEL-N-11-21914-00001					0.22	0.35	0.43	70	N	NC			33	
1"	NaturalSun Low-E IG	PEL-N-11-21645-00001	3	3	3	Krypton	0.19	0.39	0.47	74	N	NC			39	CA
	with grilles-between-the-glass	PEL-N-11-21911-00001					0.19	0.35	0.43	74	N	NC			36	CA
	with integral grilles	PEL-N-11-21920-00001					0.19	0.35	0.43	74	N	NC			36	CA
Vent Triple-Pane High Altitude Glazing																
1"	Advanced Low-E IG	PEL-N-11-21643-00001	3	3	3	air	0.25	0.23	0.42	66	N	NC	SC	S	22	
	with grilles-between-the-glass	PEL-N-11-21909-00001					0.25	0.22	0.38	66	N	NC	SC	S	21	
	with integral grilles	PEL-N-11-21918-00001					0.25	0.22	0.38	66	N	NC	SC	S	21	
1"	SunDefense Low-E IG	PEL-N-11-21644-00001	3	3	3	air	0.25	0.18	0.39	66	N	NC	SC	S	19	
	with grilles-between-the-glass	PEL-N-11-21910-00001					0.25	0.16	0.35	66	N	NC	SC	S	18	
	with integral grilles	PEL-N-11-21919-00001					0.25	0.16	0.35	66	N	NC	SC	S	18	
1"	NaturalSun Low-E IG	PEL-N-11-21642-00001	3	3	3	air	0.25	0.39	0.47	66	N	NC			31	
	with grilles-between-the-glass	PEL-N-11-21908-00001					0.26	0.35	0.43	66	N	NC			28	
	with integral grilles	PEL-N-11-21917-00001					0.26	0.35	0.43	66	N	NC			28	

R-Value = 1/U-Factor
SHGC = Solar Heat Gain Coefficient
VLT % = Visible Light Transmission
CR = Condensation Resistance
ER = Canadian Energy Rating

(1) Glazing performance values are calculated for Pine using NFRC 100, NFRC 200 and NFRC 500. Thermal performance of other wood species may vary. ENERGY STAR® values are updated to 2016 (Version 6) criteria.
(2) The values shown are based on Canada's updated ENERGY STAR® 2020 initiative.
Based on unit size, some products will use 2.5 mm glass that will have equivalent or improved performance from what is shown.
See the Product Performance section for more detailed information or visit www.energystar.gov for Energy Star guidelines.

Climate Zones

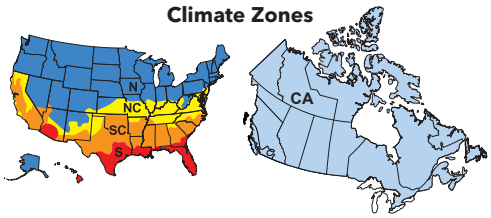

Glazing Performance - Total Unit

Glazing Thickness	Type of Glazing	NFRC Certified Product #	Glass (mm)			Gap Fill	Performance Values 1				Shaded Areas Meet ENERGY STAR® Performance Criteria in Zones Shown					
											U. S.				Canada 2	
			Ext.	Mid.	Int.		U-Factor	SHGC	VLT %	CR	Zone				ER	
Fixed Triple-Pane Glazing - Aluminum-Clad Exterior											N	NC	SC	S		3
1"	Advanced Low-E IG	PEL-N-1-53646-00001	3	3	3	argon	0.20	0.27	0.49	71	N	NC			30	CA
	with grilles-between-the-glass	PEL-N-1-53912-00001					0.20	0.24	0.44	71	N	NC	SC	S	29	CA
	with integral grilles	PEL-N-1-53921-00001					0.20	0.24	0.44	71	N	NC	SC	S	29	CA
1"	Advanced Low-E IG	PEL-N-1-53652-00001	3	3	3	Krypton	0.16	0.27	0.49	75	N	NC			35	CA
	with grilles-between-the-glass	PEL-N-1-53918-00001					0.17	0.24	0.44	75	N	NC	SC	S	32	CA
	with integral grilles	PEL-N-1-53927-00001					0.17	0.24	0.44	75	N	NC	SC	S	32	CA
1"	SunDefense™ Low-E IG	PEL-N-1-53647-00001	3	3	3	argon	0.20	0.20	0.45	71	N	NC	SC	S	26	CA
	with grilles-between-the-glass	PEL-N-1-53913-00001					0.20	0.18	0.40	71	N	NC	SC	S	25	CA
	with integral grilles	PEL-N-1-53922-00001					0.20	0.18	0.40	71	N	NC	SC	S	25	CA
1"	SunDefense™ Low-E IG	PEL-N-1-53653-00001	3	3	3	Krypton	0.16	0.20	0.45	75	N	NC	SC	S	31	CA
	with grilles-between-the-glass	PEL-N-1-53919-00001					0.16	0.18	0.40	75	N	NC	SC	S	30	CA
	with integral grilles	PEL-N-1-53928-00001					0.17	0.18	0.40	75	N	NC	SC	S	29	CA
1"	NaturalSun Low-E IG	PEL-N-1-53645-00001	3	3	3	argon	0.20	0.45	0.55	71	N				41	CA
	with grilles-between-the-glass	PEL-N-1-53911-00001					0.21	0.40	0.49	71	N	NC			37	CA
	with integral grilles	PEL-N-1-53920-00001					0.21	0.40	0.49	71	N	NC			37	CA
1"	NaturalSun Low-E IG	PEL-N-1-53651-00001	3	3	3	Krypton	0.17	0.45	0.55	75	N				45	CA
	with grilles-between-the-glass	PEL-N-1-53917-00001					0.17	0.40	0.49	75	N	NC			42	CA
	with integral grilles	PEL-N-1-53926-00001					0.17	0.40	0.49	75	N	NC			42	CA
Fixed Triple-Pane High Altitude Glazing																
1"	Advanced Low-E IG	PEL-N-1-53649-00001	3	3	3	air	0.24	0.27	0.49	67	N	NC				
	with grilles-between-the-glass	PEL-N-1-53915-00001					0.24	0.24	0.44	67	N	NC	SC	S		
	with integral grilles	PEL-N-1-53924-00001					0.24	0.24	0.44	67	N	NC	SC	S		
1"	SunDefense Low-E IG	PEL-N-1-53650-00001	3	3	3	air	0.24	0.20	0.45	67	N	NC	SC	S		
	with grilles-between-the-glass	PEL-N-1-53916-00001					0.24	0.18	0.40	67	N	NC	SC	S		
	with integral grilles	PEL-N-1-53925-00001					0.24	0.18	0.40	67	N	NC	SC	S		
1"	NaturalSun Low-E IG	PEL-N-1-53648-00001	3	3	3	air	0.24	0.45	0.55	66	N				36	CA
	with grilles-between-the-glass	PEL-N-1-53914-00001					0.25	0.40	0.49	66	N	NC				
	with integral grilles	PEL-N-1-53923-00001					0.24	0.40	0.49	66	N	NC				

R-Value = 1/U-Factor
SHGC = Solar Heat Gain Coefficient
VLT % = Visible Light Transmission
CR = Condensation Resistance
ER = Canadian Energy Rating

(1) Glazing performance values are calculated for Pine using NFRC 100, NFRC 200 and NFRC 500. Thermal performance of other wood species may vary. ENERGY STAR® values are updated to 2016 (Version 6) criteria.
(2) The values shown are based on Canada's updated ENERGY STAR® 2020 initiative.
Based on unit size, some products will use 2.5 mm glass that will have equivalent or improved performance from what is shown. See the Product Performance section for more detailed information or visit www.energystar.gov for Energy Star guidelines.

Climate Zones

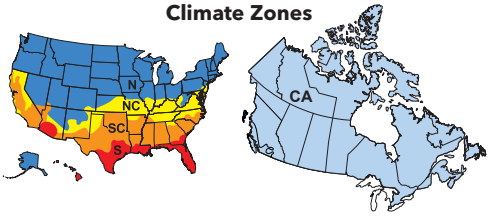

Products with Impact-Resistant Glass

For a complete list of ratings, refer to the Impact-Resistant product section.

Product	Design Pressure Large Missile Rating D		Hallmark Certified	Florida Product Approval System
	Minimum	Maximum		
Vent Units				
11/16" Insulated Glass PVB	75	75	411-H-1339	FL10015.1
1" Insulated Glass SGP	75	+75 / -85	411-H-1339	FL10015.3
Fixed Units				
11/16" Insulated Glass PVB	75	75	411-H-1339	FL10022.1
1" Insulated Glass SGP	+75 / -85	+75 / -85	411-H-1339	FL10022.4
Large Fixed Units				
11/16" Insulated Glass PVB	75	75	411-H-1339	FL10022.1
1" Insulated Glass SGP	75	+75 / -85	411-H-1339	FL10022.4

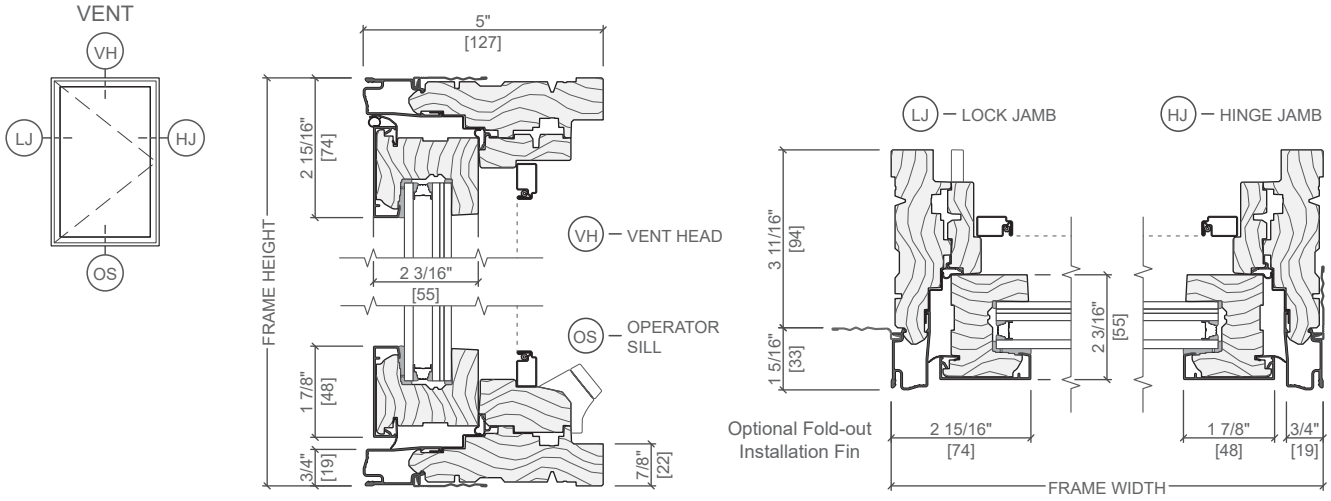

(–) = Not Available
All sizes and glass types are tested for air/water/structural and impact-resistance, and are certified for wind zone 4, large missile rating D.
Florida Product Approval System number not needed if Miami-Dade County approved.

Contemporary Style Collection - Integral Light Technology®

Square Grilles
Clad Exterior - Wood Interior

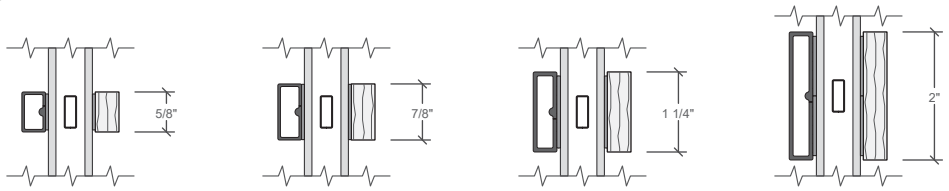

5/8" 7/8" 1 1/4" 2"

Grilles-Between-the-Glass

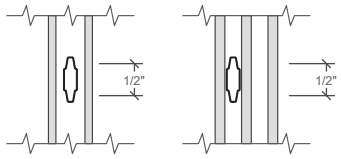

3/4" Contoured Grille 3/4" Contoured Grille

Integral Light Technology® Grilles

Prairie Lite Patterns

Size range availability is for 3/4", 7/8" and 1-1/4" grille width.
Standard corner lite dimension for Prairie patterns = 2-1/2" VG.

9-Lite
- Available in all standard and special sizes.

Other Available Patterns

Cross
- Standard visible glass to separator bar = one-quarter of total visible glass height.

Top Row
- Standard visible glass to separator bar = 14" or half of total visible glass height, whichever is smaller.

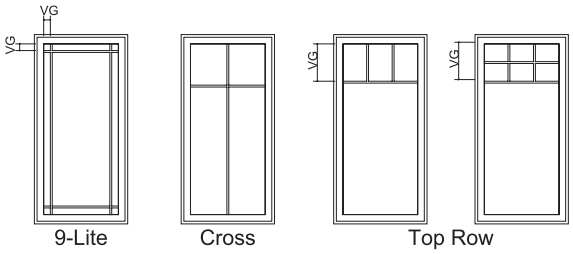

Grilles-Between-the-Glass

Available Patterns

9-Lite
- Available in all standard and special sizes.

Cross
- Available for units with frame heights ≥35". Standard visible glass to separator bar = 1/4 of total visible glass height.

Top Row
- Standard visible glass to separator bar = 14" for frame heights >35". Standard visible glass to separator bar = 21" for 35" frame heights and optional for 41" frame height. Separator bar at 12" or 16" optional for frame heights >41".

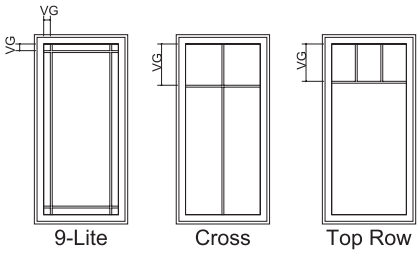

For traditional patterns, see size tables.

VG = Visible Glass
Lite dimensions noted can vary.
Custom configurations are also available, for details contact your local Pella sales representative.

Casement Shapes - (as viewed from the exterior)

General Restrictions All Angle Top

Angled Shapes - Fixed

Frame cannot exceed 96" in both directions.

Minimum angle between adjoining members is 20°, and maximum angle is < 160°.

Maximum frame < 54.5 ft^2 (based on rectangular unit).

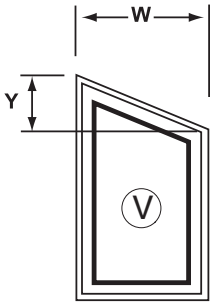

Angled Shapes - Roto Operator

Maximum frame area equals 19.5 ft^2 (based on rectangular unit).

Not all units meet egress requirements.

Frame width cannot exceed hinge jamb height.

Hinge Side Height ≥ Frame Width ÷ 2955 x Frame Area + 18.175"
*** Calculate Frame Area as if unit was a rectangle. = Frame Height x Frame Width**

Unit must be hinged off short jamb, if angle height (Y) divided by angle width (W) is greater than 0.364.

Unit is not valid if angle height (Y) is greater than angle width (X).

Short Side (S1) must be less than overall height.

Custom Stile and Rail Widths

The A dimension shown can vary from 1-1/2", 1-7/8", 3", 5".

For Unit sizes > 36 sq ft 1-1/2" sash is not available.

Any members meeting at an angle not equal to 90° must be the same width.

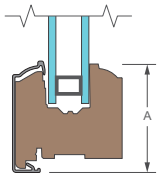

Cross section shown is representation of design, bottom rail shown as an example.

The following additional options are available:

- Special Wood Types
- Custom Grille Types and Patterns
- Custom Glazing
- Custom Width and height rectangular units
- Custom Width sash stiles and rails
- Angled Shape vent and fixed windows
- Corner Window Units (Fixed Only)

Corner Window

Contact your local sales representative for complete information.

NOTE: Performance Class and Grade for a Casement with additional options and Specialty windows may not be the same as Standard and Special size units. Please contact your local Pella representative for complete information.

Angled Shape Units		Minimum	Maximum	Restrictions
Trapezoid	**Fixed**			
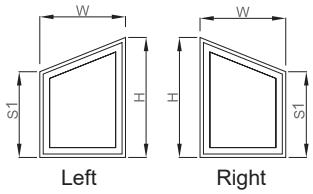	W	9"	12' 0"	
	H	9"	12' 0"	
	S1	1' 1-3/4"	–	
	Vent with Side Pivot Hinge			
	W	1' 1-3/4"	3' 5"	S1 ≥ W ÷ 2955 x (W x H) + 18.175" H ≤ W + S1
	(Hinge Side)	1' 1-3/4"	8' 0"	If (H - S1) ÷ W > 0.364, Unit must hinge off of short side
	Lock Jamb Side	9"	8' 0"	See Restricted Opening.
Pentagon	**Fixed**			
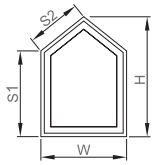	W	9"	12' 0"	Peak must be centered. This shape is defined with peak centered for calculation purposes. If peak is not centered, it must be reviewed manually for acceptability. Maximum frame area cannot be > 54.5 sq ft.
	H	1' 4-13/16"	12' 0"	
	S1 / S2	9"	–	
	Vent with Side Pivot Hinge			
	W	1' 1-3/4"	3' 5"	S1 ≥ W ÷ 2955 x (W x H) + 18.175"
	H	1' 7-9/16"	8' 0"	H ≤ W ÷ 2 + S1
	S1	13-3/4"	< 8' 0"	Maximum frame area cannot be > 19.5 sq ft.
	S2	9"	–	See Restricted Opening.
Isosceles Triangle	**Fixed**			
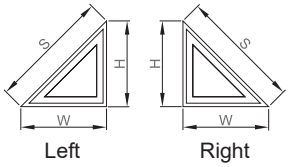	W	11-1/4"	11' 3-5/16"	
	H	11-1/4"	11' 3-5/16"	
	S	9"	12' 0"	

Mitered Corner		Minimum	Maximum	Restrictions
Fixed Sash in Frame (Casement)	**Fixed**			
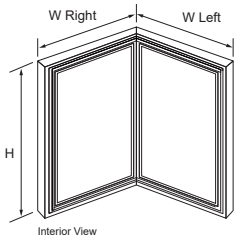	W Left	12"	4' 0"	Max Frame area of each side cannot be > 54.5 sq ft. Max Glass Area of each side cannot be > 48 sq ft.
	W Right	12"	4' 0"	
	Height	12"	6' 1"	
Fixed Frame Direct Set	**Fixed**			
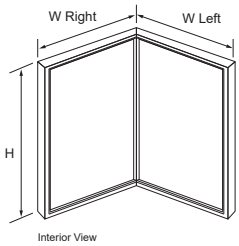	W Left	12"	4' 0"	Max Frame area of each side cannot be > 54.5 sq ft. Max Glass Area of each side cannot be > 48 sq ft.
	W Right	12"	4' 0"	See Fixed Frame Direct Set product section for features and options
	Height	12"	6' 1"	

Angled shapes are not available with push-out hardware.

Pella® Reserve™ Contemporary Casement Window

Size Tables

Transoms

	(451) (432)	(552) (533)	(603) (584)	(654) (635)	(756) (737)	(832) (813)	(908) (889)
Opening	1' 5 3/4"	1' 9 3/4"	1' 11 3/4"	2' 1 3/4"	2' 5 3/4"	2' 8 3/4"	2' 11 3/4"
Frame	1' 5"	1' 9"	1' 11"	2' 1"	2' 5"	2' 8"	2' 11"
(451) (432) / 1' 5 3/4" / 1' 5"	1717						
(552) (533) / 1' 9 3/4" / 1' 9"		2121					
(603) (584) / 1' 11 3/4" / 1' 11"			2323				
(654) (635) / 2' 1 3/4" / 2' 1"				2525			
(756) (737) / 2' 5 3/4" / 2' 5"					2929		

Vent Units

(813) / 2' 8 3/4" / 2' 8"	1732	2132	2332	2532	2932	3232	
(908) (889) / 2' 11 3/4" / 2' 11"	1735	2135	2335	2535	2935 E3	3235 E2	3535 E1 E2
(1 060) (1 041) / 3' 5 3/4" / 3' 5"	1741	2141	2341	2541 E3	2941 E1 E2	3241 E1 E2	3541 E
(1 213) (1 194) / 3' 11 3/4" / 3' 11"	1747	2147	2347	2547 E2	2947 E	3247 E	3547 E
(1 365) (1 346) / 4' 5 3/4" / 4' 5"	1753	2153	2353	2553 E2	2953 E	3253 E	3553 E
(1 518) (1 499) / 4' 11 3/4" / 4' 11"	1759	2159	2359	2559 E2	2959 E	3259 E	3559 E
(1 670) (1 651) / 5' 5 3/4" / 5' 5"	1765	2165	2365	2565 E2	2965 E	3265 E	3565 E
(1 822) (1 803) / 5' 11 3/4" / 5' 11"	1771 T	2171	2371	2571 E2	2971 E	3271 E	3571 E
(1 873) (1 854) / 6' 1 3/4" / 6' 1"	1773 T	2173	2373	2573 E2	2973 E	3273 E	3573 E

Not to scale.
F = Fixed only
T = Tempered glass due to aspect ratio.
Traditional grille patterns shown.

Rough Opening Dimensions

Clad exterior units: Dimensions shown in tables are rough opening dimensions.

Egress Notes for Standard Crank-Out Casement:

Check all applicable local codes for emergency egress requirements.

- E = Window meets minimum clear opening of 24" height, 20" width, and 5.7 ft².
- E1 = Window meets minimum clear opening of 24" height, 20" width, and 5.0 ft².
- E2 = With optional side pivot hardware, window meets minimum clear opening of 24" height, 20" width, and 5.7 ft².
- E3 = With optional side pivot hardware, window meets minimum clear opening of 24" height, 20" width, and 5.0 ft².

See Design Data pages in this section for clear opening dimensions.

Clear opening (egress) information does not take into consideration the addition of a Rolscreen (or any other accessory) to the product. Consult your local building code to ensure products with Rolscreens meet egress requirements.

Side pivot hardware reduces Performance class to 'R'.

Egress information shown is for standard operators only, for Push-Out Casement egress information see the Design Data pages.

Pella® Reserve™ Contemporary Casement Window

Size Tables - Fixed

	(451) (432)	(552) (533)	(603) (584)	(654) (635)	(756) (737)	(832) (813)	(908) (889)	(1 060) (1 041)	(1 213) (1 194)	(1 365) (1 346)	(1 518) (1 499)
Opening	1' 5 3/4"	1' 9 3/4"	1' 11 3/4"	2' 1 3/4"	2' 5 3/4"	2' 8 3/4"	2' 11 3/4"	3' 5 3/4"	3' 11 3/4"	4' 5 3/4"	4' 11 3/4"
Frame	1' 5"	1' 9"	1' 11"	2' 1"	2' 5"	2' 8"	2' 11"	3' 5"	3' 11"	4' 5"	4' 11"
(451) (432) 1' 5 3/4" / 1' 5"	1717	2117	2317	2517	2917	3217	3517	4117	4717	5317	5917
(552) (533) 1' 9 3/4" / 1' 9"		2121						4121	4721	5321	5921
(603) (584) 1' 11 3/4" / 1' 11"			2323					4123	4723	5323	5923
(654) (635) 2' 1 3/4" / 2' 1"	1725	2125	2325	2525	2925	3225	3525	4125	4725	5325	5925
(756) (737) 2' 5 3/4" / 2' 5"					2929			4129	4729	5329	5929
(832) (813) 2' 8 3/4" / 2' 8"	1732	2132	2332	2532	2932	3232	3532	4132	4732	5332	5932
(908) (889) 2' 11 3/4" / 2' 11"	1735	2135	2335	2535	2935	3235	3535	4135	4735	5335	5935
(1 060) (1 041) 3' 5 3/4" / 3' 5"	1741	2141	2341	2541	2941	3241	3541	4141	4741	5341	5941
(1 213) (1 194) 3' 11 3/4" / 3' 11"	1747	2147	2347	2547	2947	3247	3547	4147	4747	5347	5947
(1 365) (1 346) 4' 5 3/4" / 4' 5"	1753	2153	2353	2553	2953	3253	3553	4153	4753	5353	5953
(1 518) (1 499) 4' 11 3/4" / 4' 11"	1759	2159	2359	2559	2959	3259	3559	4159	4759	5359	5959
(1 670) (1 651) 5' 5 3/4" / 5' 5"	1765	2165	2365	2565	2965	3265	3565	4165	4765	5365	5965
(1 822) (1 803) 5' 11 3/4" / 5' 11"	1771 T	2171	2371	2571	2971	3271	3571	4171	4771	5371	5971
(1 873) (1 854) 6' 1 3/4" / 6' 1"	1773 T	2173	2373	2573	2973	3273	3573	4173	4773	5373	5973

Rough Opening Dimensions

Clad exterior units: Dimensions shown in tables are rough opening dimensions.

Not to scale.
Traditional grille patterns shown.

Special Size Frame Dimensions

	Minimum	Maximum
Vent	1'1-3/4" W x 1'1-3/4" H (13.75" x 13.75") (349 x 349)	3'11" W x 9'0" H (47" x 108") (1 194 x 2 743)
	Frame width cannot exceed frame height on vent sizes. Max frame area 19.5 sq ft.	
Fixed	10" W x 10" H (254 x 254)	12'0" in one direction (144") (3 658)
	Max Fixed frame area cannot be greater than 66.25 sq ft. One side must be ≤ 87.375" Max Glass Area cannot be greater than 60 sq ft. Maximum Glass weight is 400 Pounds	

Available within size range shown. Standard Performance Option only.
Keep frame dimensions to the nearest 1/8" increment.
If Frame Width or Height > 96" OR Frame Area > 40.1 sq. ft. OR Glass Area > 36 sq. ft., Stiles and rails must be at least 1.875".
See the Curved, Angled and Rectangular shapes pages or contact your Pella representative for the availability of custom sizes smaller or larger than the parameters.

Vent Casement

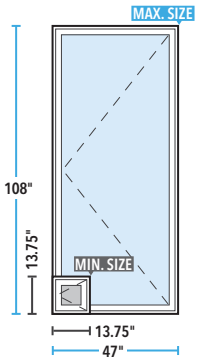

Fixed Casement

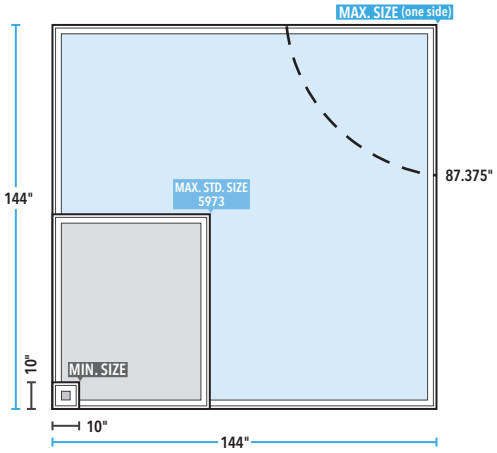

Standard Hardware Clear Opening formulas		
Hinge	Frame Width	Formula
Standard	FW ≥ 29" and ≤ 30-1/2"	FW - 9"
Standard	FW > 30-1/2"	FW - 9-3/4"
Side Pivot	FW ≥ 25" and ≤ 35"	FW - 4-3/8"

Clear opening height = unit height - 4.125"

For units with FW > 35" reference Restricted Opening chart.

Restricted Opening	
Frame Width	Approximate Sash Opening Angle
>35	28 degrees
36	26 degrees
37	25 degrees
38	24 degrees
39	23 degrees
40	22 degrees
41	21 degrees

Sash opening will be limited to the angle shown.

Units over 35 inches wide do NOT meet Egress.

Miscellaneous Formulas

Visible Glass	Width = Frame – 2.46" x 2 Height = Frame – 2.46" x 2
Actual Glass	Width = Frame – 4" Height = Frame – 4"
Glass Weight	Actual Glass Width x Actual Glass Height x Actual Glass Thickness ÷ 11

Glazing weight in pounds, all Glass Width (W), Height (H) and Thickness are in inches.

Side Pivot Clear Opening formulas				
Hinge	Frame Width	Frame Height	Clear Opening Width Formula	
			Clad Exterior	Wood Exterior
STD	17" to ≤ 29"	17" to ≤ 73"	Unit Width - 4.375	Unit Width - 4.375
	> 29" to ≤ 35"	29" to ≤ 47"	Unit Width - 4.375	Unit Width - 4.375
Heavy Duty*	13.75" to < 17"	13.75" to ≤ 96"	(Unit Width x 0.8) - 2.95	(Unit Width x 0.892) - 4.219
	17" to < 19"	13.75" to ≤ 96"	(Unit Width x 0.9) - 4.65	(Unit Width x 0.9) - 4.35
	19" to < 25"	13.75" to ≤ 96"	(Unit Width x 0.883) - 4.433	(Unit Width x 0.883) - 4.133
	25" to 29"	13.75" to ≤ 96"	Unit Width - 5.55	Unit Width - 5.55
	> 29" to ≤ 35"	13.75" to ≤ 96"	(Unit Width x 0.9) - 4.15	(Unit Width x 0.917) - 4.533

Clear opening height = unit height - 4.125"

* All units with Impact glass or standard IG glass weighing 56 lbs. or more require heavy duty hinges.

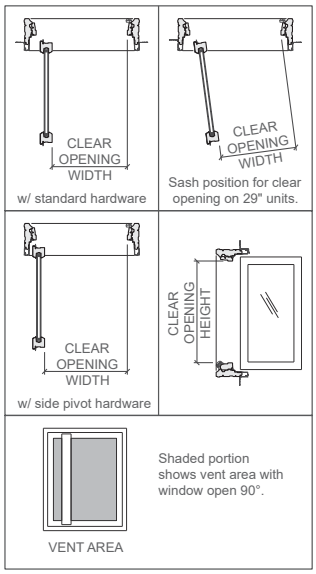

NOTE: Performance Class and Grade for a Casement with additional options and Specialty windows may not be the same as Standard and Special size units. Please contact your local Pella representative for complete information.

Vent and Fixed, Standard Operator, Aluminum-Clad Exteriors

Unit	Egress	Clear Opening Width (Inches)	Clear Opening Height (Inches)	Clear Opening Ft²	Vent Area Ft²	Visible Glass Ft²	Standard Glass Thickness (mm) Dual-Pane Glazing Annealed	Dual-Pane Glazing Tempered	Triple-Pane Glazing Annealed or Tempered	Performance Class & Grade[1] Vent	Fixed
1732		7-1/4	27-7/8	1.4	2.0	2.1	2.5	3	3	CW50	CW50
1735		7-1/4	30-7/8	1.6	2.3	2.3	2.5	3	3	CW50	CW50
1741		7-1/4	36-7/8	1.9	2.8	2.8	2.5	3	3	CW50	CW50
1747		7-1/4	42-7/8	2.2	3.2	3.2	2.5	3	3	CW50	CW50
1753		7-1/4	48-7/8	2.5	3.7	3.7	2.5	3	3	CW50	CW50
1759		7-1/4	54-7/8	2.8	4.2	4.2	2.5	3	3	CW50	CW50
1765		7-1/4	60-7/8	3.1	4.7	4.6	2.5	3	3	CW50	CW50
1771T		7-1/4	66-7/8	3.4	5.2	5.1	–	3	3	CW50	CW50
1773T		7-1/4	68-7/8	3.5	5.3	5.3	–	3	3	CW50	CW50
2132		11-1/4	27-7/8	2.2	2.7	2.8	2.5	3	3	CW50	CW50
2135		11-1/4	30-7/8	2.4	3.1	3.1	2.5	3	3	CW50	CW50
2141		11-1/4	36-7/8	2.9	3.7	3.7	2.5	3	3	CW50	CW50
2147		11-1/4	42-7/8	3.3	4.4	4.4	2.5	3	3	CW50	CW50
2153		11-1/4	48-7/8	3.8	5.0	5.0	2.5	3	3	CW50	CW50
2159		11-1/4	54-7/8	4.3	5.7	5.6	2.5	3	3	CW50	CW50
2165		11-1/4	60-7/8	4.8	6.3	6.3	2.5	3	3	CW45/CW50	CW45/CW50
2171		11-1/4	66-7/8	5.2	7.0	6.9	2.5	3	3	CW45/CW50	CW45/CW50
2173		11-1/4	68-7/8	5.4	7.2	7.1	2.5	3	3	CW40/CW50	CW40/CW50
2332		13-1/4	27-7/8	2.6	3.1	3.1	2.5	3	3	CW50	CW50
2335		13-1/4	30-7/8	2.8	3.4	3.5	2.5	3	3	CW50	CW50
2341		13-1/4	36-7/8	3.4	4.2	4.2	2.5	3	3	CW50	CW50
2347		13-1/4	42-7/8	3.9	4.9	4.9	2.5	3	3	CW50	CW50
2353		13-1/4	48-7/8	4.5	5.6	5.7	2.5	3	3	CW50	CW50
2359		13-1/4	54-7/8	5.0	6.4	6.4	2.5	3	3	CW45/CW50	CW45/CW50
2365		13-1/4	60-7/8	5.6	7.1	7.1	2.5	3	3	CW40/CW50	CW40/CW50
2371		13-1/4	66-7/8	6.2	7.9	7.8	2.5	3	3	CW35/CW50	CW35/CW50
2373		13-1/4	68-7/8	6.3	8.1	8.1	2.5	3	3	CW35/CW50	CW35/CW50
2532		15-1/4	27-7/8	3.0	3.4	3.5	2.5	3	3	CW50	CW50
2535		15-1/4	30-7/8	3.3	3.8	3.9	2.5	3	3	CW50	CW50
2541	E3	20-5/8	36-7/8	5.3	4.6	4.7	2.5	3	3	CW50	CW50
2547	E2	20-5/8	42-7/8	6.1	5.5	5.5	2.5	3	3	CW50	CW50
2553	E2	20-5/8	48-7/8	7.0	6.3	6.3	2.5	3	3	CW50	CW50
2559	E2	20-5/8	54-7/8	7.9	7.1	7.1	2.5	3	3	CW45/CW50	CW45/CW50
2565	E2	20-5/8	60-7/8	8.7	7.9	7.9	2.5	3	3	CW40/CW50	CW40/CW50
2571	E2	20-5/8	66-7/8	9.6	8.7	8.7	2.5	3	3	CW35/CW50	CW35/CW50
2573	E2	20-5/8	68-7/8	9.9	9.0	9.0	2.5	3	3	CW30/CW50	CW30/CW50
2932		24-5/8	27-7/8	4.8	4.1	4.2	2.5	3	3	CW50	CW50
2935	E3	24-5/8	30-7/8	5.3	4.6	4.7	2.5	3	3	CW50	CW50
2941	E2	24-5/8	36-7/8	6.3	5.6	5.7	2.5	3	3	CW50	CW50
2947	E	20	42-7/8	6.0	6.6	6.7	2.5	3	3	CW50	CW50
2953	E	20	48-7/8	6.8	7.6	7.6	2.5	3	3	CW50	CW50
2959	E	20	54-7/8	7.6	8.6	8.6	2.5	3	3	CW45/CW50	CW45/CW50
2965	E	20	60-7/8	8.5	9.5	9.6	2.5	3	3	CW40/CW50	CW40/CW50
2971	E	20	66-7/8	9.3	10.5	10.5	3	3	3	CW45/CW50	CW45/CW50
2973	E	20	68-7/8	9.6	10.9	10.9	3	3	3	CW45/CW50	CW45/CW50
3232	E3	27-5/8	27-7/8	5.3	4.6	4.8	2.5	3	3	CW50	CW50
3235	E2	27-5/8	30-7/8	5.9	5.2	5.3	2.5	3	3	CW50	CW50
3241	E2	27-5/8	36-7/8	7.1	6.3	6.4	2.5	3	3	CW50	CW50
3247	E	22-1/4	42-7/8	6.6	7.4	7.5	2.5	3	3	CW50	CW50
3253	E	22-1/4	48-7/8	7.6	8.5	8.6	2.5	3	3	CW50	CW50
3259	E	22-1/4	54-7/8	8.5	9.6	9.7	2.5	3	3	CW45/CW50	CW45/CW50
3265	E	22-1/4	60-7/8	9.4	10.7	10.8	3	3	3	CW50	CW50
3271	E	22-1/4	66-7/8	10.3	11.9	11.9	3	3	3	CW45/CW50	CW45/CW50
3273	E	22-1/4	68-7/8	10.6	12.2	12.3	3	3	3	CW45/CW50	CW45/CW50
3532F		–	–	–	–	5.3	2.5	3	3	–	CW50
3535	E1	25-1/4	30-7/8	5.4	5.8	5.9	2.5	3	3	CW50	CW50
3541	E	25-1/4	36-7/8	6.5	7.0	7.2	2.5	3	3	CW50	CW50
3547	E	25-1/4	42-7/8	7.5	8.3	8.4	2.5	3	3	CW50	CW50
3553	E	25-1/4	48-7/8	8.6	9.5	9.6	2.5	3	3	CW45/CW50	CW45/CW50
3559	E	25-1/4	54-7/8	9.6	10.7	10.8	3	3	3	CW50	CW50
3565	E	25-1/4	60-7/8	10.7	12.0	12.0	3	3	3	CW50	CW50
3571	E	25-1/4	66-7/8	11.7	13.2	13.3	3	3	3	CW45/CW50	CW45/CW50
3573	E	25-1/4	68-7/8	12.1	13.6	13.7	3	3	3	CW45/CW50	CW45/CW50

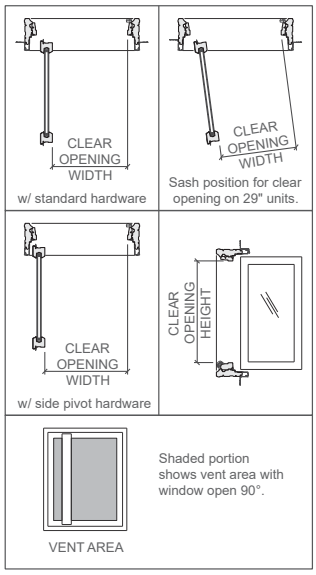

Egress Notes for Standard Crank-Out Casement:

Check all applicable local codes for emergency egress requirements.

- E = Window meets minimum clear opening of 24" height, 20" width, and 5.7 ft².
- E1 = Window meets minimum clear opening of 24" height, 20" width, and 5.0 ft².
- E2 = With optional side pivot hardware, window meets minimum clear opening of 24" height, 20" width, and 5.7 ft².
- E3 = With optional side pivot hardware, window meets minimum clear opening of 24" height, 20" width, and 5.0 ft².

Clear opening (egress) information does not take into consideration the addition of a Rolscreen (or any other accessory) to the product. Consult your local building code to ensure products with Rolscreens meet egress requirements.

Side pivot hardware reduces Performance class to 'R'.

Egress information shown is for standard crank-out operators only, it does not include Push-Out Casements.

(–) = Not Applicable
F = Fixed only
T = Tempered required due to aspect ratio.
(1) Maximum performance when glazed with the appropriate glass thickness and using standard hinge hardware. Second value, where shown, requires tempered glass.
To convert area to square meters (m²), multiply square feet by 0.0929.

Fixed, Aluminum-Clad Exteriors

Unit	Visible Glass Ft²	Standard Glass Thickness (mm)				Performance Class & Grade (1)
		Dual-Pane Glazing		Triple-Pane Glazing		
		Annealed	Tempered	Annealed	Tempered	
4135	7.2	2.5	3	3	3	CW50
4141	8.6	2.5	3	3	3	CW50
4147	10.1	3	3	3	3	CW50
4153	11.6	3	3	3	3	CW50
4159	13.0	3	3	3	3	CW50
4165	14.5	3	3	3	3	CW50
4171	16.0	3	3	3	3	CW45/CW50
4173	16.5	3	3	3	3	CW45/CW50
4735	8.4	2.5	3	3	3	CW50
4741	10.1	3	3	3	3	CW50
4747	11.8	3	3	3	3	CW50
4753	13.5	3	3	3	3	CW50
4759	15.3	3	3	3	3	CW50
4765	17.0	3	3	3	3	CW45/CW50
4771	18.7	4	4	4	4	CW50
4773	19.3	4	4	4	4	CW50
5335	9.6	2.5	3	3	3	CW45/CW50
5341	11.6	3	3	3	3	CW50
5347	13.5	3	3	3	3	CW50
5353	15.5	3	4	3	4	CW45/CW50
5359	17.5	3	4	3	4	CW40/CW50
5365	19.4	4	4	4	4	CW50
5371	21.4	4	4	4	4	CW50
5373	22.1	4	4	4	4	CW50
5935	10.8	3	3	3	3	CW50
5941	13.0	3	3	3	3	CW50
5947	15.3	3	3	3	3	CW50
5953	17.5	3	4	3	4	CW40/CW50
5959	19.7	4	4	4	4	CW50
5965	21.9	4	4	4	4	CW50
5971	24.1	4	4	4	4	CW45/CW50
5973	24.9	4	4	4	4	CW45/CW50

Transoms

Unit	Clear Opening (Inches)			Vent Area Ft²	Visible Glass Ft²	Standard Glass Thickness (mm)			Performance Class & Grade (1)
	Width	Height	Ft²			Dual-Pane Glazing		Triple-Pane Glazing	
						Annealed	Tempered	Annealed or Tempered	
1714F	–	–	–	–	0.6	2.5	3	3	CW50
1717	7-1/4	12-7/8	0.6	0.8	0.9	2.5	3	3	CW50
1725F	–	–	–	–	1.5	2.5	3	3	CW50
2114F	–	–	–	–	0.9	2.5	3	3	CW50
2117F	–	–	–	–	1.2	2.5	3	3	CW50
2121	11-1/4	16-7/8	1.3	1.5	1.6	2.5	3	3	CW50
2125F	–	–	–	–	2.0	2.5	3	3	CW50
2314F	–	–	–	–	1.0	2.5	3	3	CW50
2317F	–	–	–	–	1.3	2.5	3	3	CW50
2323	13-1/4	18-7/8	1.7	2.0	2.1	2.5	3	3	CW50
2325F	–	–	–	–	2.3	2.5	3	3	CW50
2514F	–	–	–	–	1.1	2.5	3	3	CW50
2517F	–	–	–	–	1.5	2.5	3	3	CW50
2525	15-1/4	20-7/8	2.2	2.5	2.6	2.5	3	3	CW50
2914F	–	–	–	–	1.3	2.5	3	3	CW50
2917F	–	–	–	–	1.8	2.5	3	3	CW50
2925F	–	–	–	–	3.1	2.5	3	3	CW50
2929	20	24-7/8	3.5	3.6	3.8	2.5	3	3	CW50
3214F	–	–	–	–	1.5	2.5	3	3	CW50
3217F	–	–	–	–	2.1	2.5	3	3	CW50
3225F	–	–	–	–	3.5	2.5	3	3	CW50
3514F	–	–	–	–	1.7	2.5	3	3	CW50
3517F	–	–	–	–	2.3	2.5	3	3	CW50
3525F	–	–	–	–	3.9	2.5	3	3	CW50

(–) = Not Applicable
F = Fixed only
(1) Maximum performance when glazed with the appropriate glass thickness. Second value, where shown, requires tempered glass.
To convert area to square meters (m²), multiply square feet by 0.0929.

Push-Out Casement

Unit	Egress	Clear Opening					Vent Area Ft²	Visible Glass Ft²	Frame Area Ft²	Performance Class & Grade[1]
		Width (Inches)	Height (Inches)	Ft²	Sash Angle (Degrees)	Reach to Close Sash (Inches)				
1735		7-1/2	31-1/4	1.6	85	18-1/4	1.6	2.3	4.1	R50
1741		7-1/2	37-1/4	1.9	85	18-1/4	1.9	2.8	4.8	R50
1747		7-1/2	43-1/4	2.3	85	18-1/4	2.3	3.2	5.5	R50
1753		7-1/2	49-1/4	2.6	85	18-1/4	2.6	3.7	6.2	R50
1759		7-1/2	55-1/4	2.9	85	18-1/4	2.9	4.2	6.9	R50
1765		7-1/2	61-1/4	3.2	85	18-1/4	3.2	4.6	7.6	R50
1771		7-1/2	67-1/4	3.5	85	18-1/4	3.5	5.1	8.3	R50
2135		10-5/8	31-1/4	2.3	70	19-1/2	2.3	3.1	5.1	R50
2141		10-5/8	37-1/4	2.7	70	19-1/2	2.7	3.7	5.9	R50
2147		10-5/8	43-1/4	3.2	70	19-1/2	3.2	4.4	6.8	R50
2153		10-5/8	49-1/4	3.6	70	19-1/2	3.6	5.0	7.7	R50
2159		10-5/8	55-1/4	4.1	70	19-1/2	4.1	5.6	8.6	R50
2165		10-5/8	61-1/4	4.5	70	19-1/2	4.5	6.3	9.4	R50
2171		10-5/8	67-1/4	5.0	70	19-1/2	5.0	6.9	10.3	R50
2335		14-1/2	31-1/4	3.1	70	22	3.1	3.5	5.5	R50
2341		14-1/2	37-1/4	3.8	70	22	3.8	4.2	6.5	R50
2347		14-1/2	43-1/4	4.4	70	22	4.4	4.9	7.5	R50
2353		14-1/2	49-1/4	5.0	70	22	5.0	5.7	8.4	R50
2359		14-1/2	55-1/4	5.6	70	22	5.6	6.4	9.4	R50
2365		14-1/2	61-1/4	6.2	70	22	6.2	7.1	10.3	R50
2371		14-1/2	67-1/4	6.8	70	22	6.8	7.8	11.3	R50
2535		16-1/4	31-1/4	3.5	70	25	3.5	3.9	6.0	R50
2541		16-1/4	37-1/4	4.2	70	25	4.2	4.7	7.1	R50
2547		16-1/4	43-1/4	4.9	70	25	4.9	5.5	8.1	R50
2553		16-1/4	49-1/4	5.6	70	25	5.6	6.3	9.2	R50
2559		16-1/4	55-1/4	6.2	70	25	6.2	7.1	10.2	R50
2565		16-1/4	61-1/4	6.9	70	25	6.9	7.9	11.2	R50
2571		16-1/4	67-1/4	7.6	70	25	7.6	8.7	12.3	R50
2935		20	31-1/4	4.3	57	25-1/2	4.3	4.7	7.0	R50
2941	E1	20	37-1/4	5.2	57	25-1/2	5.2	5.7	8.2	R50
2947	E	20	43-1/4	6.0	57	25-1/2	6.0	6.7	9.4	R50
2953	E	20	49-1/4	6.8	57	25-1/2	6.8	7.6	10.6	R50
2959	E	20	55-1/4	7.7	57	25-1/2	7.7	8.6	11.8	R50
2965	E	20	61-1/4	8.5	57	25-1/2	8.5	9.6	13.0	R50
2971	E	20	67-1/4	9.3	57	25-1/2	9.3	10.5	14.2	R50
3535		20-1/8	31-1/4	4.4	45	26	4.4	5.9	8.5	R50
3541	E1	20-1/8	37-1/4	5.2	45	26	5.2	7.2	9.9	R50
3547	E	20-1/8	43-1/4	6.0	45	26	6.0	8.4	11.4	R50
3553	E	20-1/8	49-1/4	6.9	45	26	6.9	9.6	12.8	R50
3559	E	20-1/8	55-1/4	7.7	45	26	7.7	10.8	14.3	R50
3565	E	20-1/8	61-1/4	8.6	45	26	8.6	12.0	15.7	R50
3571	E	20-1/8	67-1/4	9.4	45	26	9.4	13.3	17.2	R50

Push-Out Casement Egress Notes:

Check all applicable local codes for emergency egress requirements.

E = Window meets minimum clear opening of 24" height, 20" width, and 5.7 ft².

E1 = Window meets minimum clear opening of 24" height, 20" width, and 5.0 ft².

Clear opening (egress) information does not take into consideration the addition any other accessories to the product. Consult your local building code to ensure products meet egress requirements.

(1) Maximum performance when glazed with the appropriate glass thickness. Refer to the Product Performance section for more information.

To convert area to square meters (m²), multiply square feet by 0.0929.

Pella® Reserve™ Contemporary Casement Window

Detailed Product Description - Aluminum-Clad Exterior

Frame

- Select softwood, immersion treated with Pella's EnduraGuard® wood protection formula in accordance with WDMA I.S.-4. The EnduraGuard formula includes three active ingredients for protection against the effects of moisture, decay, stains from mold and mildew. Plus, an additional ingredient adds protection against termite damage.
- Interior exposed surfaces are [clear pine] [mahogany] [douglas fir].
- Exterior surfaces are clad with aluminum.
- Components are assembled with screws, staples and concealed corner locks
- Overall frame depth is 5" (127mm) for a wall depth of 3-11/16" (94mm).
- Optional factory-applied jamb extensions available between 3-13/16" (97mm) and 9-3/16" (233mm).
- Optional factory-installed fold-out installation fins with flexible fin corners.
- Optional factory-applied EnduraClad® exterior trim.

Sash

- Select softwood, immersion treated with Pella's EnduraGuard® wood protection formula in accordance with WDMA I.S.-4. The EnduraGuard formula includes three active ingredients for protection against the effects of moisture, decay, stains from mold and mildew. Plus, an additional ingredient adds protection against termite damage.
- Interior exposed surfaces are [clear pine] [mahogany] [douglas fir].
- Exterior surfaces are clad with extruded aluminum butt-jointed at all corners of the sash with through-stile construction and sealed.
- Corners mortised and tenoned, glued and secured with metal fasteners.
- Sash thickness is [1-13/16" (46mm) for 11/16"] [2-1/8" (54mm) for 1"] glazing.
- Sash exterior profile is square, interior profile is square.

Weatherstripping

- Dual weatherstripping.
  - Flexible santoprene material compressed between frame and sash for positive seal on all four sides.
  - Secondary thermoplastic vulcanizate (TPV) leaf-type weatherstrip between edge of sash and frame on the vertical sides and bottom side, and Santoprene® bulb-type weatherstrip on the top.

Glazing System [1]

- Quality float glass complying with ASTM C 1036.
- Silicone-glazed dual-pane 11/16" dual-seal insulating glass [[annealed] [tempered]], [[clear] [[Advanced Low-] [SunDefense™ Low-E] [NaturalSun Low-E] [AdvancedComfort Low-E] with argon]] [[bronze] [gray] [green] Advanced Low-E [with Argon]] [obscure] [Reflective Bronze] [Reflective Gray].

– or –

- Silicone-glazed dual-pane 1" dual-seal tempered spandrel glass [Lava Bronze Amber] [Black] [Ford Blue] [Symmetry Bronze] [Symmetry Gray] [Symmetry Green].

– or –

- Silicone-glazed dual-pane 11/16" dual-seal [[annealed] [tempered]] non-impact laminated glass [[clear] [[Advanced Low-E] [SunDefense Low-E] with Argon]] [[bronze] [gray] [green] Advanced Low-E [with argon]].

– or –

- Silicone-glazed 1" triple-pane, dual-seal insulating glass [[annealed] [tempered]] [[Advanced Low-E] [SunDefense™] [NaturalSun Low-E] with [argon] [krypton]].

– or –

- Impact-Resistant
  - Silicone-glazed 1" dual-seal impact-resistant insulating glass[1] SGP. [[tempered] [annealed]] exterior light is [[Advanced Low-E] [SunDefense] with argon] [clear] [bronze] [gray] [green]]. Laminated clear interior light.

  – or –

  - Silicone-glazed 11/16" dual-seal impact-resistant insulating glass[1] [PVB]. [[tempered] [annealed]] exterior light is [[Advanced Low-E with argon] [clear]]. Laminated [clear] interior light, or [[tempered] [annealed]] exterior light is [[Advanced Low-E] [SunDefense] with argon] [clear]]. Laminated [[bronze] [gray] [green]] interior light.

Exterior

- Aluminum clad exteriors shall be finished with EnduraClad® protective finish, in a multi-step, baked-on finish.
  - Color is [standard] [custom][2].

– or –

- Aluminum clad exteriors shall be finished with EnduraClad Plus protective finish with 70% fluoropolymer resin in a multi-step, baked-on finish
  - Color is [standard] [custom][2].

Interior

- [Unfinished, ready for site finishing] [factory primed with one coat acrylic latex] [factory prefinished [paint] [stain] [2]].

Hardware

- Roto operator assembly
  - Steel worm gear sash operator with hardened gears.
  - Operator base is zinc die cast with painted finish.
  - Operator linkage, hinge slide, and hinge arms are stainless steel.
  - Exposed fasteners are stainless steel.
  - Hardware shall exceed 1,000 hours salt spray exposure per ASTM B 117.
- All vent units are available with left- or right-hand hinging.
- SureLock® System—A single handle locking system operates positive-acting arms that reach out and pull the sash into a locked position: one operating lock installed on units with frame height 29" and less, two unison operating locks installed on units with frame height over 29".
- Style of hardware is [Saldo integrated fold-away crank and standard lock handle with [baked enamel [Champagne] [White] [Brown] [Matte Black]] [Satin Nickel] [Oil-Rubbed Bronze] [Polished Chrome] hardware finish].

Optional Products

Grilles

- Integral Light Technology® grilles
  - Interior grilles are [5/8"] [7/8"] [1-1/4"] [2"] square profile that are solid [pine] [mahogany] [douglas fir]. Interior surfaces are [unfinished, ready for site finishing] [factory primed] [pine: factory prefinished [paint] [stain] [2]].
  - Exterior grilles are [5/8"] [7/8"] [1-1/4"] [2"] square profile that are extruded aluminum.
  - Patterns are [Traditional] [Prairie] [Top Row] [Cross].
  - Insulating glass contains non-glare spacer between the panes of glass.
  - Grilles are adhered to both sides of the insulating glass with VHB acrylic adhesive tape and aligned with the non-glare spacer.

– or –

- Grilles-Between-the-Glass[3]
  - Insulating glass contains 3/4" contoured aluminum grilles permanently installed between two panes of glass (exterior air-space on triple-pane insulating glass).
  - Patterns are [Traditional] [Prairie] [Cross] [Top Row].
  - Interior color is [White] [Tan[4]] [Brown[4]] [Putty[4]] [Black] [Ivory] [Harvest] [Cordovan] [Brickstone].
  - Exterior color[5] is [standard][2].

Screens

- InView™ Screens
  - Vinyl-coated 18/18 mesh fiberglass screen cloth complying with the performance requirements of SMA 1201, set in aluminum frame fitted to inside of window, supplied complete with all necessary hardware.
  - Screen frame finish is [baked enamel [Champagne] [White] [Brown] [Black]].

Hardware

- Optional factory applied limited opening hardware available for vent units in stainless steel; nominal 3" opening.
- Optional factory applied window opening control device. Device allows window to open less than 4" with normal operation, with a release mechanism that allows the sash to open completely. Complies with ASTM F2090-17.

Sensors

- Optional factory installed integrated security sensors available in vent units.

(1) Low-E coated insulating glass is argon-filled (except high altitude). All other insulating glass (including high altitude Low-E) is air-filled.
(2) Contact your local Pella sales representative for current designs and color options.
(3) Available in clear or Low-E insulating glass with argon, and obscure insulated glass.
(4) Tan, Brown and Putty Interior GBG colors are available in single-tone (Brown/Brown, Tan/Tan or Putty/Putty). Other interior colors are also available with tan or brown exterior.
(5) Appearance of exterior grille color will vary depending on Low-E coating on glass.

Pella® Reserve™ Contemporary Casement Window

Detailed Product Description - Aluminum-Clad Exterior, Push-Out Casement

Frame

- Select softwood, immersion treated with Pella's EnduraGuard® wood protection formula in accordance with WDMA I.S.-4. The EnduraGuard formula includes three active ingredients for protection against the effects of moisture, decay, stains from mold and mildew. Plus, an additional ingredient adds protection against termite damage.
- Interior exposed surfaces are [clear pine] [mahogany] [douglas fir].
- Exterior surfaces are clad with aluminum.
- Components are assembled with screws, staples and concealed corner locks
- Overall frame depth is 5" (127mm) for a wall depth of 3-11/16" (94mm).
- Optional factory-applied jamb extensions available between 3-13/16" (97mm) and 9-3/16" (233mm).
- Optional factory-installed fold-out installation fins with flexible fin corners.
- Optional factory-applied EnduraClad® exterior trim.

Sash

- Select softwood, immersion treated with Pella's EnduraGuard® wood protection formula in accordance with WDMA I.S.-4. The EnduraGuard formula includes three active ingredients for protection against the effects of moisture, decay, stains from mold and mildew. Plus, an additional ingredient adds protection against termite damage.
- Interior exposed surfaces are [clear pine] [mahogany] [douglas fir].
- Exterior surfaces are clad with extruded aluminum butt-jointed at all corners of the sash with through-stile construction and sealed.
- Corners mortised and tenoned, glued and secured with metal fasteners.
- Sash thickness is [1-13/16" (46mm) for 11/16"] [2-1/8" (54mm) for 1"] glazing.
- Sash exterior profile is square, interior profile is square.

Weatherstripping

- Dual weatherstripping.
  - Flexible santoprene material compressed between frame and sash for positive seal on all four sides.
  - Secondary thermoplastic vulcanizate (TPV) leaf-type weatherstrip between edge of sash and frame on the vertical sides and bottom side, and Santoprene® bulb-type weatherstrip on the top.

Glazing System [1]

- Quality float glass complying with ASTM C 1036.
- Silicone-glazed dual-pane 11/16" dual-seal insulating glass [[annealed] [tempered]], [[clear] [[Advanced Low-] [SunDefense™ Low-E] [NaturalSun Low-E] [AdvancedComfort Low-E] with argon]] [[bronze] [gray] [green] Advanced Low-E [with Argon]] [obscure] [Reflective Bronze] [Reflective Gray].

– or –

- Silicone-glazed dual-pane 1" dual-seal tempered spandrel glass [Lava Bronze Amber] [Black] [Ford Blue] [Symmetry Bronze] [Symmetry Gray] [Symmetry Green].

– or –

- Silicone-glazed dual-pane 11/16" dual-seal [[annealed] [tempered]] non-impact laminated glass [[clear] [[Advanced Low-E] [SunDefense Low-E] with Argon]] [[bronze] [gray] [green] Advanced Low-E [with argon]].

– or –

- Silicone-glazed 1" triple-seal insulating glass [[annealed] [tempered]] [[Advanced Low-E] [SunDefense™] [NaturalSun Low-E] with [argon] [krypton]].

Exterior

- Aluminum clad exteriors shall be finished with EnduraClad® protective finish, in a multi-step, baked-on finish.
  - Color is [standard] [custom][2].

– or –

- Aluminum clad exteriors shall be finished with EnduraClad Plus protective finish with 70% fluoropolymer resin in a multi-step, baked-on finish
  - Color is [standard] [custom][2].

Interior

- [Unfinished, ready for site finishing] [factory primed with one coat acrylic latex] [factory prefinished [paint] [stain][2]].

Hardware

- Finish of finger pull handle is [baked enamel, [Champagne] [White] [Brown]] [Satin Brass] [Satin Nickel] [Oil-Rubbed Bronze].
- All vent units are available with left- or right-hand hinging.
- SureLock® System—A single handle locking system operates positive-acting arms that reach out and pull the sash into a locked position: one operating lock installed on units with frame height 29" and less, two unison operating locks installed on units with frame height over 29".
- [Saldo lock handle with [baked enamel [Champagne] [White] [Brown] [Matte Black]] [Satin Brass] [Satin Nickel] [Oil-Rubbed Bronze] hardware finish].
- Factory applied window opening control device included. Device allows window to open less than 4" with normal operation, with a release mechanism that allows the sash to open completely.

Optional Products

Grilles

- Integral Light Technology® grilles
  - Interior grilles are [5/8"] [7/8"] [1-1/4"] [2"] square profile that are solid [pine] [mahogany] [douglas fir]. Interior surfaces are [unfinished, ready for site finishing] [factory primed] [pine: factory prefinished [paint] [stain] [2]].
  - Exterior grilles are [5/8"] [7/8"] [1-1/4"] [2"] square profile that are extruded aluminum.
  - Patterns are [Traditional] [Prairie] [Top Row] [Cross].
  - Insulating glass contains non-glare spacer between the panes of glass.
  - Grilles are adhered to both sides of the insulating glass with VHB acrylic adhesive tape and aligned with the non-glare spacer.

– or –

- Grilles-Between-the-Glass [3]
  - Insulating glass contains 3/4" contoured aluminum grilles permanently installed between two panes of glass (exterior air-space on triple-pane insulating glass).
  - Patterns are [Traditional] [Prairie] [Cross] [Top Row].
  - Interior color is [White] [Tan [4]] [Brown [4]] [Putty [4]] [Black] [Ivory] [Harvest] [Cordovan] [Brickstone].
  - Exterior color [5] is [standard][2].

Hinged In-Swing Screen

- InView™ Fiberglass Screen
  - Vinyl-coated 18/18 mesh fiberglass screen cloth complying with SMA 1201, set in an aluminum extruded frame fitted to inside of window, supplied complete with all necessary hardware.
  - Screen frame interior exposed surfaces are extruded aluminum with [White] [Brown] [Black] painted finish.

Hardware

- Optional factory applied limited opening hardware available for vent units in stainless steel; nominal 3" opening.

Sensors

- Optional factory installed integrated security sensors available in vent units.

(1) Low-E coated insulating glass is argon-filled (except high altitude). All other insulating glass (including high altitude Low-E) is air-filled.
(2) Contact your local Pella sales representative for current designs and color options.
(3) Available in clear or Low-E insulating glass with argon, and obscure insulated glass.
(4) Tan, Brown and Putty Interior GBG colors are available in single-tone (Brown/Brown, Tan/Tan or Putty/Putty). Other interior colors are also available with tan or brown exterior.
(5) Appearance of exterior grille color will vary depending on Low-E coating on glass.

Pella® Reserve™ Contemporary Casement Window

Unit Sections – Aluminum-Clad Exterior, 1-7/16" Sash

VENT

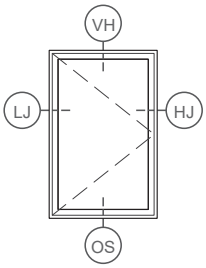

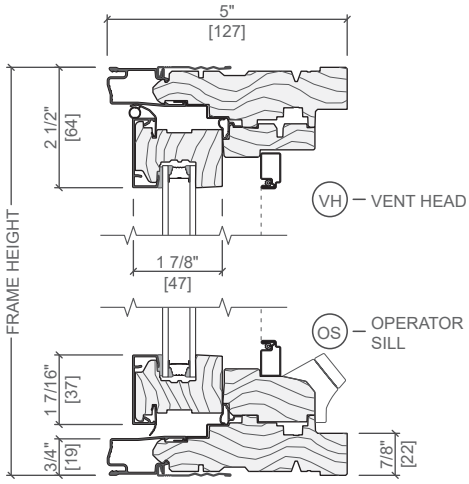

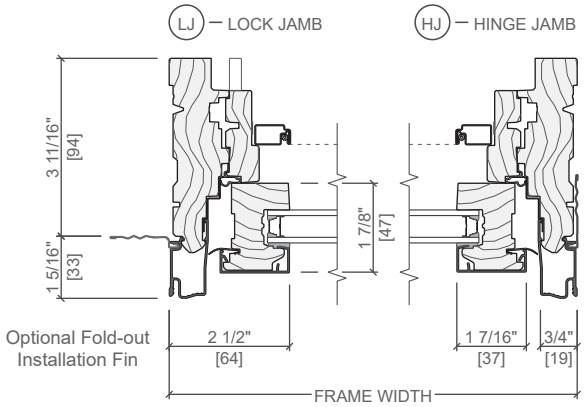

FIXED

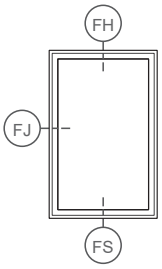

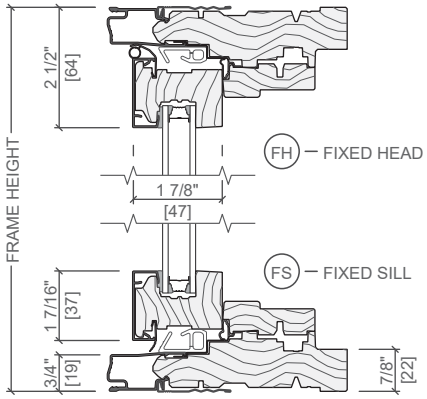

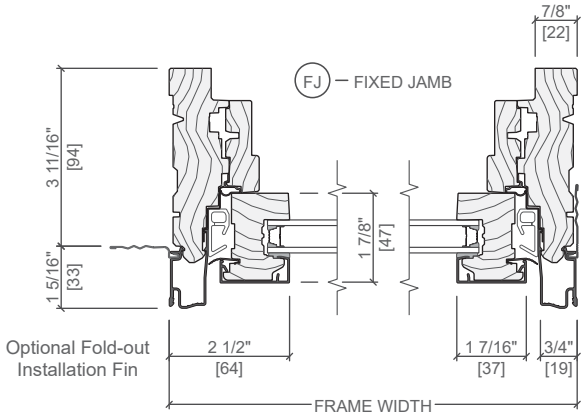

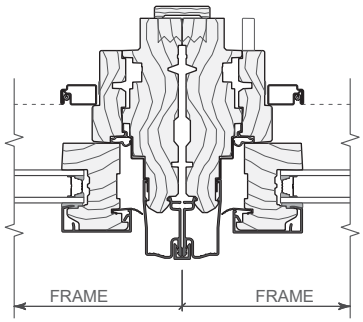

VERTICAL JOINING MULLION
VENT / VENT

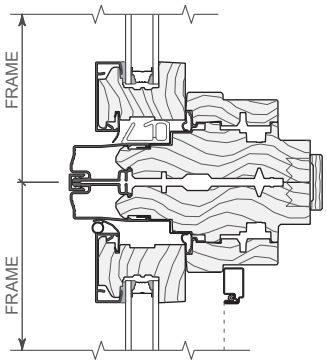

HORIZONTAL JOINING MULLION
TRANSOM / VENT

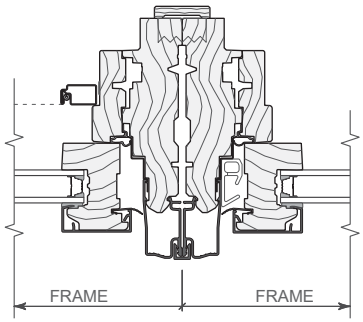

VERTICAL JOINING MULLION
VENT / FIXED

Scale 3" = 1' 0"
All dimensions are approximate.
See supporting combinations documents for mullion limitations and reinforcing requirements.

Pella® Reserve™ Contemporary Casement Window

Unit Sections – Aluminum-Clad Exterior, 1-7/8" Sash

VENT

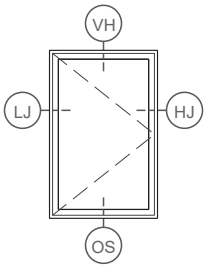

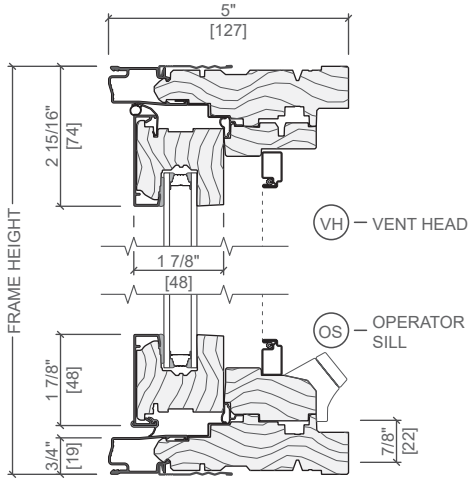

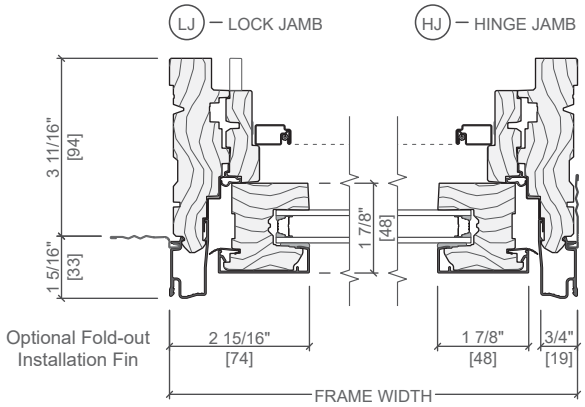

FIXED

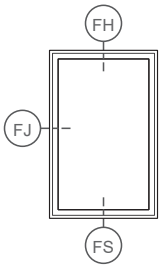

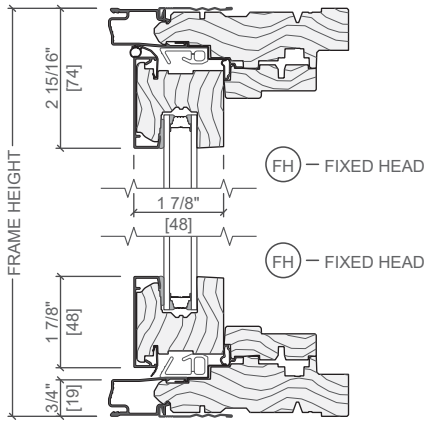

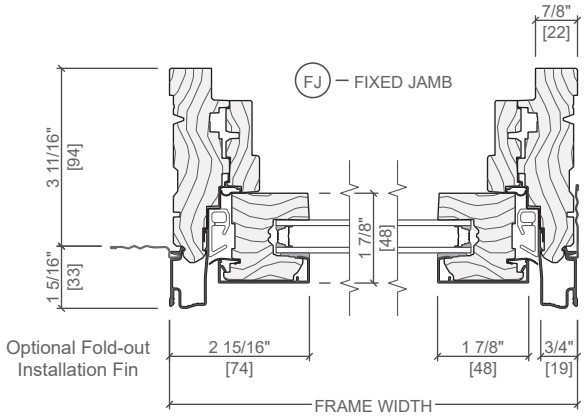

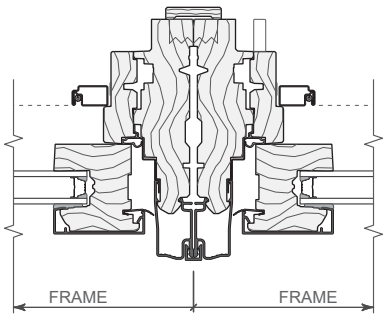

VERTICAL JOINING MULLION
VENT / VENT

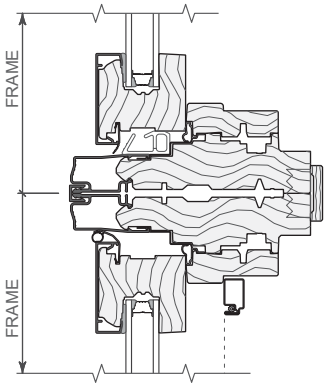

HORIZONTAL JOINING MULLION
TRANSOM / VENT

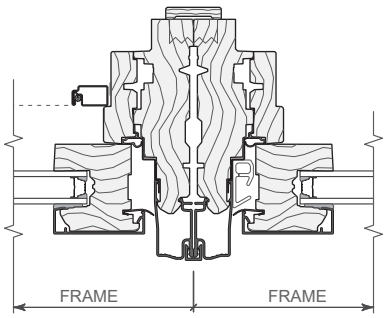

VERTICAL JOINING MULLION
VENT / FIXED

Scale 3" = 1' 0"
All dimensions are approximate.
See supporting combinations documents for mullion limitations and reinforcing requirements.

Pella® Reserve™ Contemporary Casement Window

Unit Sections - Aluminum-Clad Exterior, Triple-Pane, 1-7/8" Sash

VENT

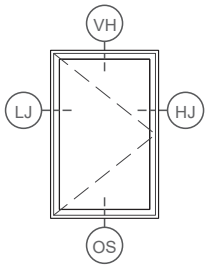

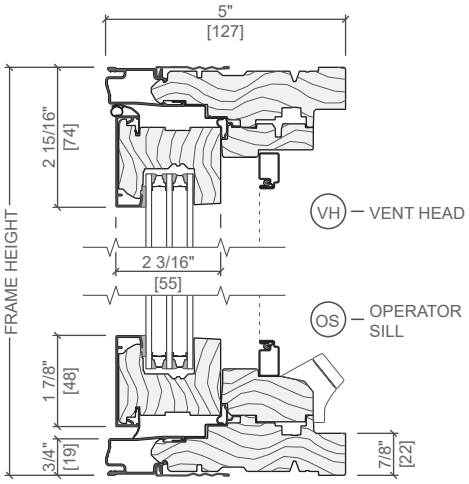

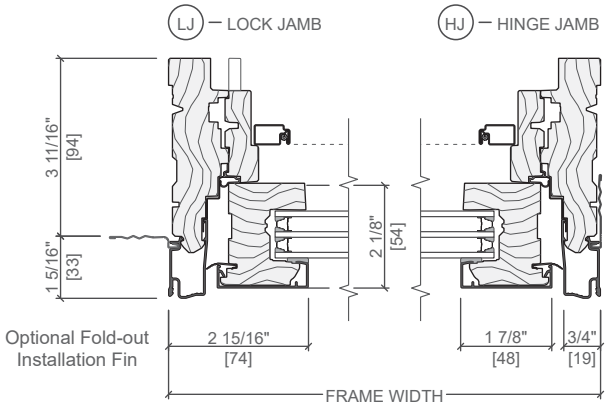

FIXED

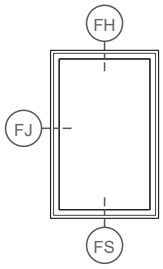

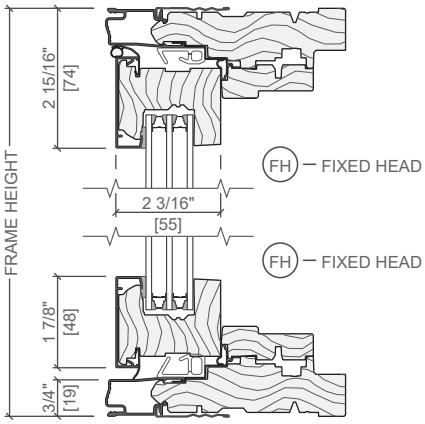

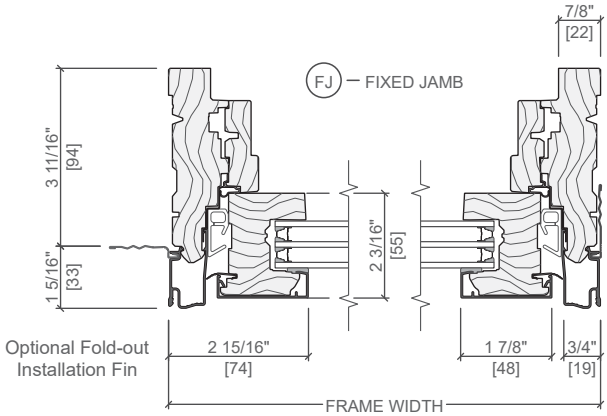

Scale 3" = 1' 0"
All dimensions are approximate.

Pella® Reserve™ Contemporary Casement Window

Unit Sections – Push-Out Casement, 1-7/16" Sash

VENT

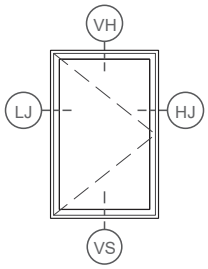

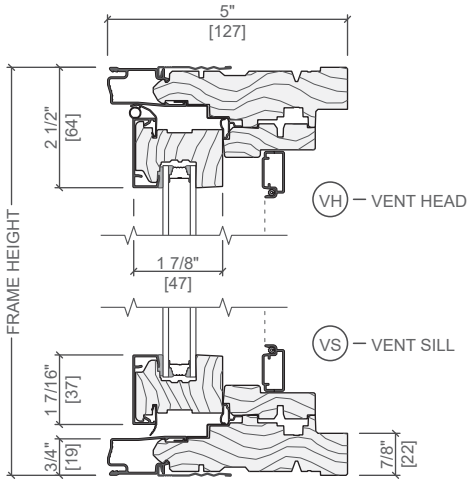

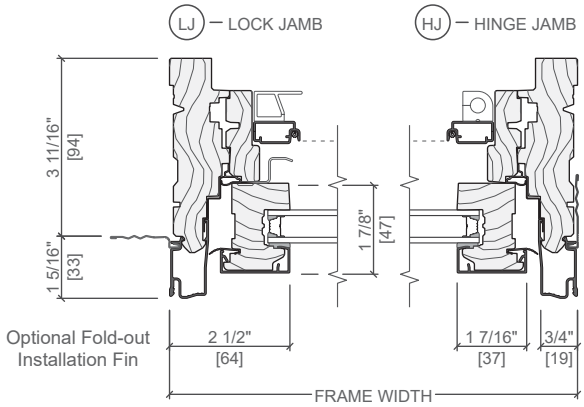

FIXED

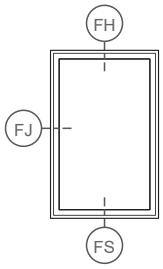

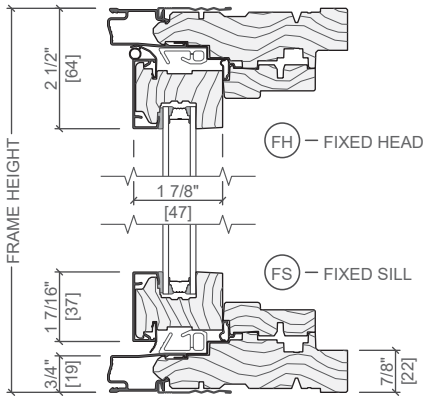

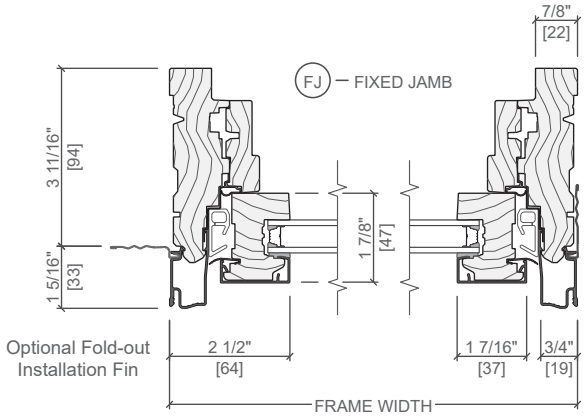

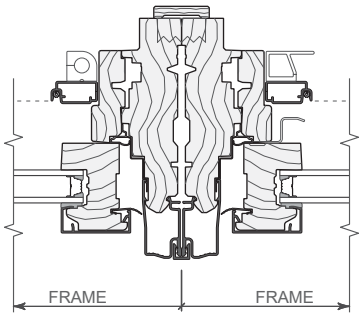

VERTICAL JOINING MULLION
VENT / VENT

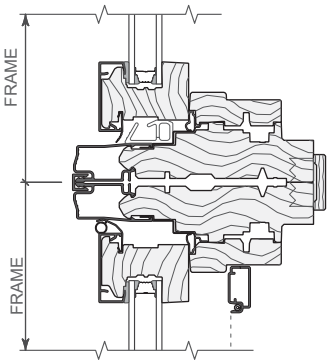

HORIZONTAL JOINING MULLION
TRANSOM / VENT

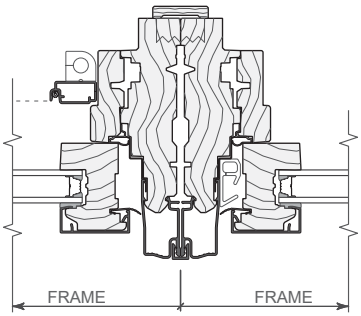

VERTICAL JOINING MULLION
VENT / FIXED

Scale 3" = 1' 0"
All dimensions are approximate.
See supporting combinations documents for mullion limitations and reinforcing requirements.

Pella® Reserve™ Contemporary Casement Window

Unit Sections – Push-Out Casement, 1-7/8" Sash

VENT

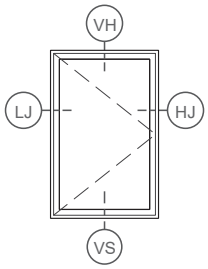

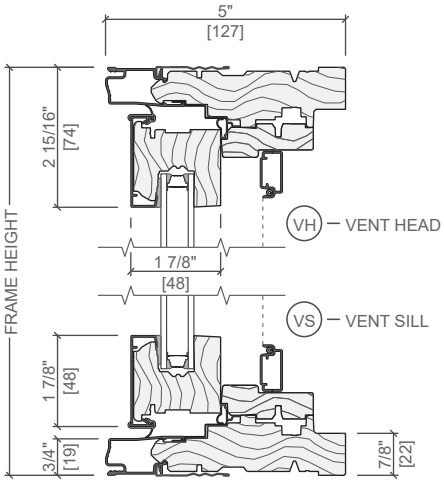

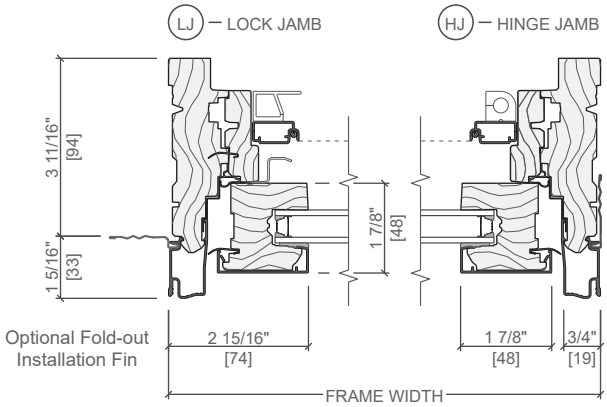

FIXED

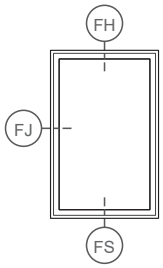

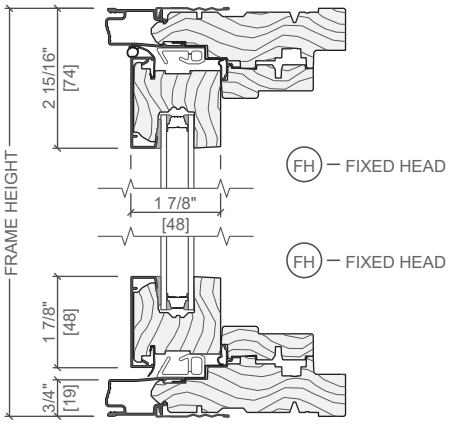

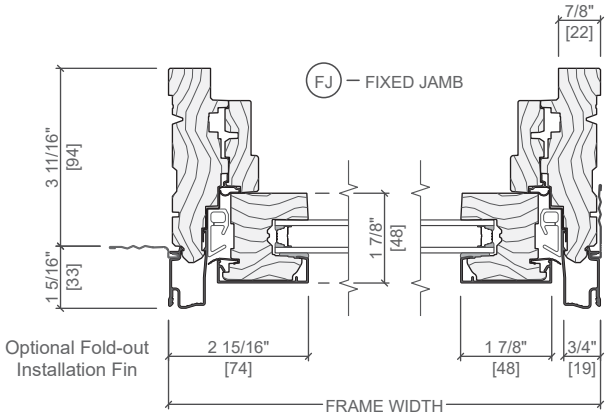

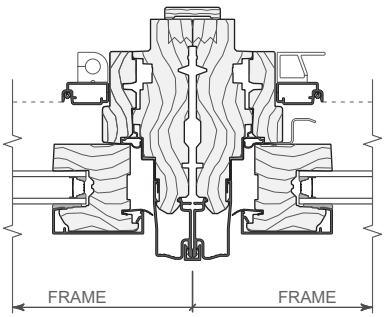

VERTICAL JOINING MULLION
VENT / VENT

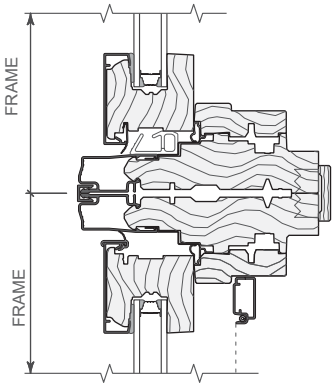

HORIZONTAL JOINING MULLION
TRANSOM / VENT

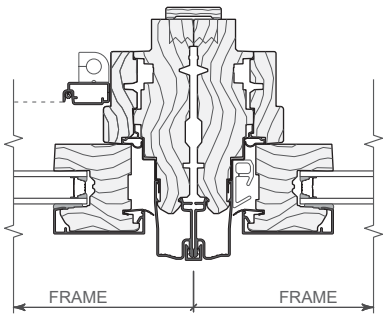

VERTICAL JOINING MULLION
VENT / FIXED

Scale 3" = 1' 0"
All dimensions are approximate.
See supporting combinations documents for mullion limitations and reinforcing requirements.

Unit Sections – Mitered Corner

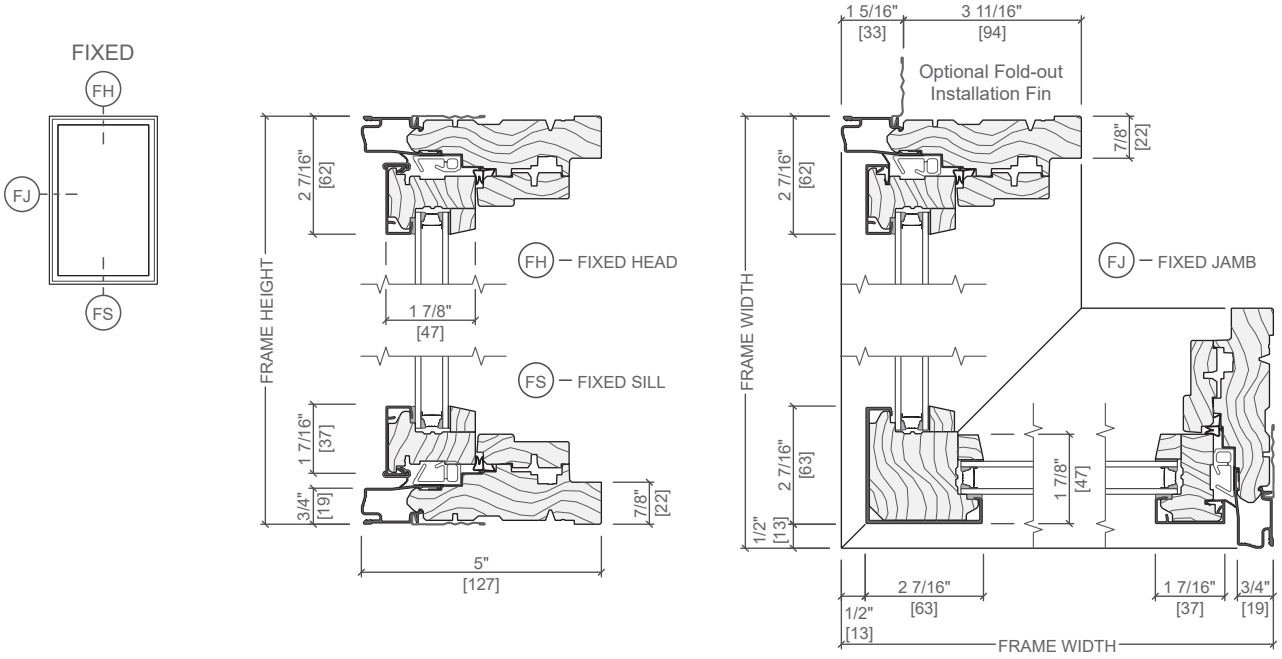

Fixed Frame Direct Set

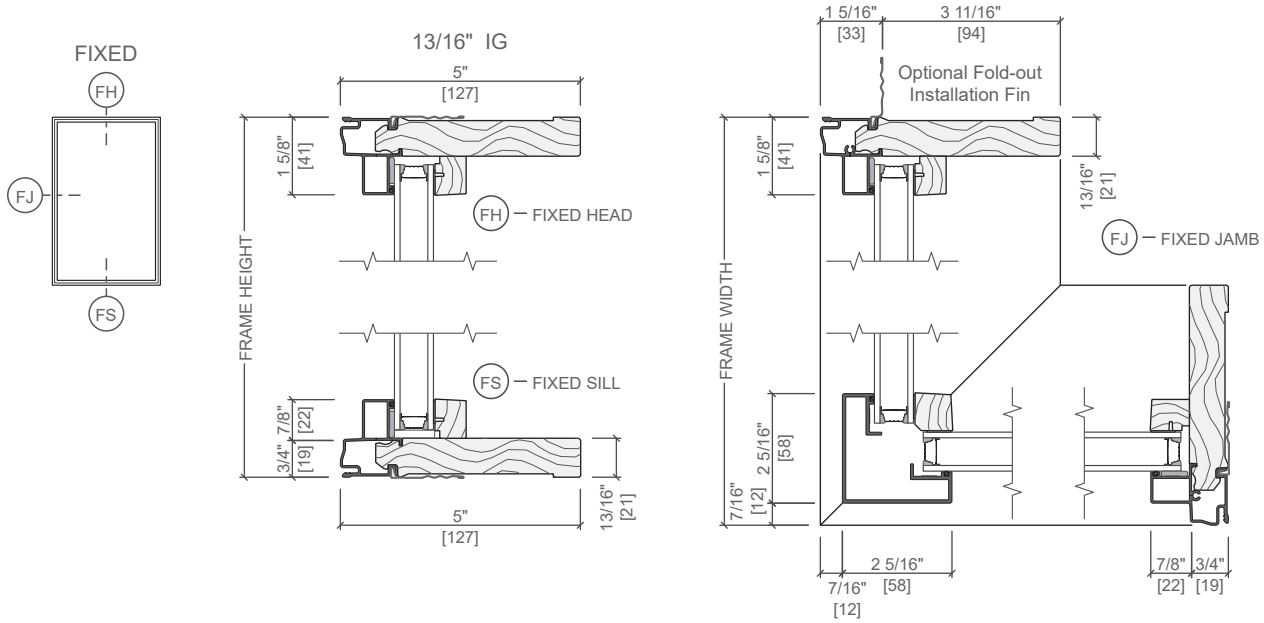

Direct Set cross section included for comparison purposes. See Fixed Frame Direct Set section or contact your local Pella sales representative for product details
Scale 3" = 1' 0"
All dimensions are approximate.

Pella® Reserve™ - Contemporary Casement

Aluminum EnduraClad® Exterior

Detailed Product Description

Frame

- Select softwood, immersion treated with Pella's EnduraGuard® wood protection formula in accordance with WDMA I.S.-4. The EnduraGuard formula includes three active ingredients for protection against the effects of moisture, decay, stains from mold and mildew. Plus, an additional ingredient adds protection against termite damage.
- Interior exposed surfaces are [clear pine] [mahogany] [douglas fir]. Any curved member may have visible finger-jointed surfaces.
- Exterior surfaces are clad with aluminum.
- Components are assembled with screws, staples and concealed corner locks
- Overall frame depth is 5" (127mm) for a wall depth of 3-11/16" (94mm).
- Optional factory-applied jamb extensions available between 3-13/16" (97mm) and 9-3/16" (233mm).
- Optional factory-installed fold-out installation fins with flexible fin corners.
- Optional factory-applied EnduraClad® exterior trim.

Sash

- Select softwood, immersion treated with Pella's EnduraGuard® wood protection formula in accordance with WDMA I.S.-4. The EnduraGuard formula includes three active ingredients for protection against the effects of moisture, decay, stains from mold and mildew. Plus, an additional ingredient adds protection against termite damage.
- Interior exposed surfaces are [clear pine] [mahogany] [douglas fir].
- Exterior surfaces are clad with extruded aluminum butt-jointed at all corners of the sash with through-stile construction and sealed.
- Corners mortised and tenoned, glued and secured with metal fasteners.
- Sash thickness is [1-13/16" (46mm) for 11/16"] [2-1/8" (54mm) for 1"] glazing.
- Sash exterior profile is square, interior profile is square.

Weatherstripping

- Dual weatherstripping.
  - Flexible santoprene material compressed between frame and sash for positive seal on all four sides.
  - Secondary thermoplastic vulcanizate (TPV) leaf-type weatherstrip between edge of sash and frame on the vertical sides and bottom side, and Santoprene® bulb-type weatherstrip on the top side.

Glazing System[1]

- Quality float glass complying with ASTM C 1036.
- Silicone-glazed dual-pane 11/16" dual-seal insulating glass [[annealed] [tempered]], [[clear] [[Advanced Low-] [SunDefense™ Low-E] [NaturalSun Low-E] [AdvancedComfort Low-E] with argon]] [[bronze] [gray] [green] Advanced Low-E [with Argon]] [obscure] [Reflective Bronze] [Reflective Gray].

-or-

- Silicone-glazed dual-pane 1" dual-seal tempered spandrel glass [Lava Bronze Amber] [Black] [Ford Blue] [Symmetry Bronze] [Symmetry Gray] [Symmetry Green].

-or-

- Silicone-glazed dual-pane 11/16" dual-seal [[annealed] [tempered]] non-impact laminated glass [[clear] [[Advanced Low-E] [SunDefense Low-E] with Argon]] [[bronze] [gray] [green] Advanced Low-E [with argon]].

– or –

- Silicone-glazed 1" triple-pane, dual-seal insulating glass [[annealed] [tempered]] [[Advanced Low-E] [SunDefense™] [NaturalSun Low-E] with [argon] [krypton]].

– or –

- Impact-Resistant
  - Silicone-glazed 1" dual-seal impact-resistant insulating glass[1] SGP. [[tempered] [annealed]] exterior light is [[Advanced Low-E] [SunDefense] with argon] [clear] [bronze] [gray] [green]]. Laminated clear interior light.

– or –

  - Silicone-glazed 11/16" dual-seal impact-resistant insulating glass[1] [PVB]. [[tempered] [annealed]] exterior light is [[Advanced Low-E with argon] [clear]]. Laminated [clear] interior light, or [[tempered] [annealed]] exterior light is [[Advanced Low-E] [SunDefense] with argon] [clear]]. Laminated [[bronze] [gray] [green]] interior light.

Exterior

- Aluminum clad exteriors shall be finished with EnduraClad® protective finish, in a multi-step, baked-on finish.
  - Color is [standard] [custom][2].

– or –

- Aluminum clad exteriors shall be finished with EnduraClad Plus protective finish with 70% fluoropolymer resin in a multi-step, baked-on finish
  - Color is [standard] [custom][2].

Interior

- [Unfinished, ready for site finishing] [factory primed with one coat acrylic latex] [factory prefinished [paint] [stain] [2]].

Hardware

- Roto operator assembly
  - Steel worm gear sash operator with hardened gears.
  - Operator base is zinc die cast with painted finish.
  - Operator linkage, hinge slide, and hinge arms are stainless steel.
  - Exposed fasteners are stainless steel.
  - Hardware shall exceed 1,000 hours salt spray exposure per ASTM B 117.
- All vent units are available with left- or right-hand hinging.
- SureLock® System—A single handle locking system operates positive-acting arms that reach out and pull the sash into a locked position: one operating lock installed on units with frame height 29" and less, two unison operating locks installed on units with frame height over 29".
- Style of hardware is [Saldo integrated fold-away crank and standard lock handle with [baked enamel [Champagne] [White] [Brown] [Matte Black]] [Satin Nickel] [Oil-Rubbed Bronze] [Polished Chrome] hardware finish].

Optional Products

Grilles

- Integral Light Technology® grilles
  - Interior grilles are [5/8”] [7/8"] [1-1/4"] [2"] square profile that are solid [pine] [mahogany] [douglas fir]. Interior surfaces are [unfinished, ready for site finishing] [factory primed] [pine: factory prefinished [paint] [stain] [2]].
  - Exterior grilles are [5/8”] [7/8"] [1-1/4"] [2"] square profile that are extruded aluminum.
  - Patterns are [Traditional] [Prairie] [Top Row] [Cross].
  - Insulating glass contains non-glare spacer between the panes of glass.
  - Grilles are adhered to both sides of the insulating glass with VHB acrylic adhesive tape and aligned with the non-glare spacer.

– or –

- Grilles-Between-the-Glass [3]
  - Insulating glass contains 3/4" contoured aluminum grilles permanently installed between two panes of glass (exterior air-space on triple-pane insulating glass).
  - Patterns are [Traditional] [Prairie] [Cross] [Top Row].
  - Interior color is [Black] [White] [Brown[4]] [Fossil] [Harvest] [Cordovan] [Ivory] [Tan[4]] [Brickstone] [Putty[4]].
  - Exterior color[5] is [standard][2].

Screens

- InView™ Screens
  - Vinyl-coated 18/18 mesh fiberglass screen cloth complying with the performance requirements of SMA 1201, set in aluminum frame fitted to inside of window, supplied complete with all necessary hardware.
  - Screen frame finish is [baked enamel [Champagne] [White] [Brown] [Black]] [Wrapped in wood veneer, factory prefinished stain to match interior finish].

Hardware

- Optional factory applied limited opening hardware available for vent units in stainless steel; nominal 3" opening.
- Optional factory applied window opening control device. Device allows window to open less than 4” with normal operation, with a release mechanism that allows the sash to open completely. Complies with ASTM F2090-17.

Sensors

- Optional factory installed integrated security sensors available in vent units.

(1) Low-E coated insulating glass is argon-filled (except high altitude). All other insulating glass (including high altitude Low-E) is air-filled.

(2) Contact your local Pella sales representative for current designs and color options.

(3) Available in clear or Low-E insulating glass with argon, and obscure insulated glass.

(4) Tan, Brown and Putty Interior GBG colors are available in single-tone (Brown/Brown, Tan/Tan or Putty/Putty). Other interior colors are also available with tan or brown exterior.

(5) Appearance of exterior grille color will vary depending on Low-E coating on glass.