ISSUE: Certificate of Appropriateness for alterations

APPLICANT: Al and Kathy Cox

LOCATION: Old and Historic Alexandria District
311 ½ North Alfred Street

ZONE: RB/Townhouse Zone

STAFF RECOMMENDATION

Staff recommends approval of the Certificate of Appropriateness for alterations, as submitted.

GENERAL NOTES TO THE APPLICANT

1. APPEAL OF DECISION: In accordance with the Zoning Ordinance, if the Board of Architectural Review denies or approves an application in whole or in part, the applicant or opponent may appeal the Board's decision to City Council on or before 14 days after the decision of the Board.

2. COMPLIANCE WITH BAR POLICIES: All materials must comply with the BAR's adopted policies unless otherwise specifically approved.

3. BUILDING PERMITS: Most projects approved by the Board of Architectural Review require the issuance of one or more construction permits by Department of Code Administration (including signs). The applicant is responsible for obtaining all necessary construction permits after receiving Board of Architectural Review approval. Contact Code Administration, Room 4200, City Hall, 703-746-4200 for further information.

4. ISSUANCE OF CERTIFICATES OF APPROPRIATENESS AND PERMITS TO DEMOLISH: Applicants must obtain a copy of the Certificate of Appropriateness or Permit to Demolish PRIOR to applying for a building permit. Contact BAR Staff, Room 2100, City Hall, 703-746-3833, or preservation@alexandriava.gov for further information.

5. EXPIRATION OF APPROVALS NOTE: In accordance with Sections 10-106(B), 10-206(B) and 10-307 of the Zoning Ordinance, any Board of Architectural Review approval will expire 12 months from the date of issuance if the work is not commenced and diligently and substantially pursued by the end of that 12-month period.

6. HISTORIC PROPERTY TAX CREDITS: Applicants performing extensive, certified rehabilitations of historic properties may separately be eligible for state and/or federal tax credits. Consult with the Virginia Department of Historic Resources (VDHR) prior to initiating any work to determine whether the proposed project may qualify for such credits.

CL
820
818
816
810
326
319
317
315
313
313
313
311
311
309
324
322
320
320
318
318
316
316
314
314
312
312
310
310
308
308
306
306
304
304
302
302
300
301
829
827
825
823
821
819
817
815
824
RB
N ALFRED ST
SITE
QUEEN ST
RC
BAR#2025-00490 OHAD
311 North Alfred Street
N
0
25
50
100 Feet

I. APPLICANT'S PROPOSAL

The applicant requests a Certificate of Appropriateness for alterations to replace an existing ground mounted heat pump with a new wall mounted mini split condenser located on the east wall of the existing circa 1977 concrete block and stucco garage. Note that this is an after-the-fact approval based on the emergency relocation of the mechanical unit due to changing site conditions. In order to maintain the interior of the structure as a livable space, it was necessary to install the mini split condenser prior to the full BAR approval.

Site context

The alley to the east, behind the subject property, is public. The installed wall mounted condenser is visible from this alley (Figure 1).

Figure 1: Garage behind 311 N Alfred

II. HISTORY

The two story, wood frame, Italianate style semi-detached residence at 311 N Alfred Street was constructed circa 1884. In 1994 the BAR approved a small rear addition and alterations to the house and detached garage (BAR 94-046). Prior to that the BAR approved the current German lap siding in 1991 (BAR 91-0051) to replace inappropriate asbestos siding. The BAR also approved the construction of the 1 ½ story stucco clad concrete block garage on 5/18/**1977.**

Previous BAR Approvals

BLD-13249 4/10/57	Replace wood siding with asbestos shingles
May 10, 1967	BAR approval to install aluminum siding on house
BAR 2020-00556	Replacement of roof at garage and rear addition, replace siding, remove stucco clad plywood chimney form, replacement of two windows, replace shutters, install new storm door at front entry, install handrails at front steps, replace garage doors, replace sliding doors at rear addition, and revision to design for cupola.
BAR 2023-00325	Install electrical meter at garage

III. ANALYSIS

Certificate of Appropriateness

The applicant is requesting after-the-fact approval for the installation of a split system condenser unit on the exterior of the existing circa 1977 stucco clad garage at the rear of the property. This is an after-the-fact approval because the applicant had to relocate the condenser immediately due to an ongoing issue related to the neighboring property. In order to maintain the livability of the building interior, the relocation could not wait until the review of the proposal by the Board.

The *Design Guidelines* encourage mechanical equipment to be located on the ground or on the roof and screened from public view wherever possible. In the case of the subject property, the building is on the property line and there is no space on the ground for the unit to be located. The garage features a gable roof with a central cupola that does not allow for the location of this unit on the roof. The popularity of split system HVAC systems has made it easier to condition existing buildings with a minimal amount of disturbance. In many cases, the system has been installed with the piping distribution along the exterior of the building face. In the case of the subject property, the applicant has installed this piping within the interior of the building, as has been requested by the Board on other similar types of mechanical systems. Staff appreciates the careful installation of the mechanical system which limits the work on the exterior to only the location of the condenser unit.

As noted in the submission materials, a similar wall mounted HVAC condenser was recently approved at the rear of the property at 308 North Columbus Street. In addition to this unit, the public alley adjacent to the subject garage is dominated by parking, trash enclosures, and other utilitarian uses befitting a secondary access. As noted above, the garage on which the unit will be located is constructed of Concrete block clad in stucco and dates from 1977. As such, this is a late twentieth century structure, unlike the main house on the site.

Because of the utilitarian nature of the adjacent public alley and the late twentieth century construction of the garage, staff supports the location of the condenser unit as constructed on the east elevation below the second floor window. Staff therefore recommends approval of the application as submitted.

STAFF
William Conkey, AIA, Historic Preservation Architect, Planning & Zoning
Tony LaColla, AICP, Land Use Services Division Chief, Planning & Zoning

IV. CITY DEPARTMENT COMMENTS

Legend: C- code requirement R- recommendation S- suggestion F- finding

Zoning
C-1 Proposed new wall mounted mini split unit will comply with zoning.

Code Administration
C-1 A mechanical permit is required.

Transportation and Environmental Services
F-1 After review of the information provided, an approved grading plan is not required at this time. Please note that if any changes are made to the plan it is suggested that T&ES be included in the review. (T&ES)

F-2 If the alley adjacent to the parcel is to be used at any point of the construction process, the following will be required:
For a Public Alley - The applicant shall contact T&ES, Construction Permitting & Inspections at (703) 746-4035 to discuss any permits and accommodation requirements that will be required.
For a Private Alley - The applicant must provide proof, in the form of an affidavit at a minimum, from owner of the alley granting permission of use. (T&ES)

C-1 The applicant shall comply with the City of Alexandria's Solid Waste Control, Title 5, Chapter 1, which sets forth the requirements for the recycling of materials (Sec. 5-1-99). (T&ES)

C-2 The applicant shall comply with the City of Alexandria's Noise Control Code, Title 11, Chapter 5, which sets the maximum permissible noise level as measured at the property line. (T&ES)

C-3 Any work within the right-of-way requires a separate permit from T&ES. (Sec. 5-2) (T&ES)

C-4 All improvements to the city right-of-way such as curbing, sidewalk, driveway aprons, etc. must be city standard design. (Sec. 5-2-1) (T&ES)

Alexandria Archaeology

F-1 No Archaeology comments.

V. ATTACHMENTS

- Application Materials
- Completed application
- Plans
- Material specifications
- Scaled survey plat if applicable
- Photographs

BAR CASE# _____
(OFFICE USE ONLY)

ADDRESS OF PROJECT: 311 1/2 N Alfred St

DISTRICT: ☒ **Old & Historic Alexandria** ☐ **Parker – Gray** ☐ **100 Year Old Building**

TAX MAP AND PARCEL: 064.04-01-27 **ZONING:** RB

APPLICATION FOR: *(Please check all that apply)*

☒ CERTIFICATE OF APPROPRIATENESS

☐ PERMIT TO MOVE, REMOVE, ENCAPSULATE OR DEMOLISH
(Required if more than 25 square feet of a structure is to be demolished/impacted)

☐ WAIVER OF VISION CLEARANCE REQUIREMENT and/or YARD REQUIREMENTS IN A VISION CLEARANCE AREA (Section 7-802, Alexandria 1992 Zoning Ordinance)

☐ WAIVER OF ROOFTOP HVAC SCREENING REQUIREMENT
(Section 6-403(B)(3), Alexandria 1992 Zoning Ordinance)

Applicant: ☒ Property Owner ☐ Business *(Please provide business name & contact person)*

Name: Al and Kathy Cox

Address: [redacted]

City: [redacted] State: [redacted]

Phone: [redacted] E-mail : [redacted]

Authorized Agent *(if applicable)*: ☐ Attorney ☐ Architect ☐ _____

Name: _____ Phone: _____

E-mail: _____

Legal Property Owner:

Name: same as applicant

Address: _____

City: _____ State: _____ Zip: _____

Phone: _____ E-mail: _____

BAR CASE# _____
(OFFICE USE ONLY)

NATURE OF PROPOSED WORK: *Please check all that apply*

☐ NEW CONSTRUCTION
☒ EXTERIOR ALTERATION: *Please check all that apply.*
- ☐ awning
- ☐ doors
- ☐ lighting
- ☐ other _____
- ☐ fence, gate or garden wall
- ☐ windows
- ☐ pergola/trellis
- ☒ HVAC equipment
- ☐ siding
- ☐ painting unpainted masonry
- ☐ shutters
- ☐ shed

☐ ADDITION
☐ DEMOLITION/ENCAPSULATION
☐ SIGNAGE

DESCRIPTION OF PROPOSED WORK: *Please describe the proposed work in detail (Additional pages may be attached).*

After-the-fact approval for emergency replacement of an existing ground mounted heat pump condenser with a new mini split condenser mounted on the east wall of the ca 1977 concrete block garage apartment, facing the public alley.

SUBMITTAL REQUIREMENTS:

☐ Check this box if there is a homeowner's association for this property. If so, you must attach a copy of the letter approving the project.

Items listed below comprise the **minimum supporting materials** for BAR applications. Staff may request additional information during application review. Please refer to the relevant section of the *Design Guidelines* for further information on appropriate treatments.

Applicants must use the checklist below to ensure the application is complete. Include all information and material that are necessary to thoroughly describe the project. Incomplete applications will delay the docketing of the application for review. Pre-application meetings are required for all proposed additions. All applicants are encouraged to meet with staff prior to submission of a completed application.

Demolition/Encapsulation : *All applicants requesting 25 square feet or more of demolition/encapsulation must complete this section. Check N/A if an item in this section does not apply to your project.*

	N/A	
☐	☒	Survey plat showing the extent of the proposed demolition/encapsulation.
☐	☒	Existing elevation drawings clearly showing all elements proposed for demolition/encapsulation.
☐	☒	Clear and labeled photographs of all elevations of the building if the entire structure is proposed to be demolished.
☐	☒	Description of the reason for demolition/encapsulation.
☐	☒	Description of the alternatives to demolition/encapsulation and why such alternatives are not considered feasible.

BAR CASE# _____
(OFFICE USE ONLY)

Additions & New Construction: *Drawings must be to scale and should not exceed 11" x 17" unless approved by staff. Check N/A if an item in this section does not apply to your project.*

N/A

- ☐ ☐ Scaled survey plat showing dimensions of lot and location of existing building and other structures on the lot, location of proposed structure or addition, dimensions of existing structure(s), proposed addition or new construction, and all exterior, ground and roof mounted equipment.
- ☐ ☐ FAR & Open Space calculation form.
- ☐ ☐ Clear and labeled photographs of the site, surrounding properties and existing structures, if applicable.
- ☐ ☐ Existing elevations must be scaled and include dimensions.
- ☐ ☐ Proposed elevations must be scaled and include dimensions. Include the relationship to adjacent structures in plan and elevations.
- ☐ ☐ Materials and colors to be used must be specified and delineated on the drawings. Actual samples may be provided or required.
- ☐ ☐ Manufacturer's specifications for materials to include, but not limited to: roofing, siding, windows, doors, lighting, fencing, HVAC equipment and walls.
- ☐ ☐ For development site plan projects, a model showing mass relationships to adjacent properties and structures.

Signs & Awnings: *One sign per building under one square foot does not require BAR approval unless illuminated. All other signs including window signs require BAR approval. Check N/A if an item in this section does not apply to your project.*

N/A

- ☐ ☐ Linear feet of building: Front:_____Secondary front (if corner lot):_____.
- ☐ ☐ Square feet of existing signs to remain:_____.
- ☐ ☐ Photograph of building showing existing conditions.
- ☐ ☐ Dimensioned drawings of proposed sign identifying materials, color, lettering style and text.
- ☐ ☐ Location of sign (show exact location on building including the height above sidewalk).
- ☐ ☐ Means of attachment (drawing or manufacturer's cut sheet of bracket if applicable).
- ☐ ☐ Description of lighting (if applicable). Include manufacturer's cut sheet for any new lighting fixtures and information detailing how it will be attached to the building's facade.

Alterations: *Check N/A if an item in this section does not apply to your project.*

N/A

- ☒ ☐ Clear and labeled photographs of the site, especially the area being impacted by the alterations, all sides of the building and any pertinent details.
- ☒ ☐ Manufacturer's specifications for materials to include, but not limited to: roofing, siding, windows, doors, lighting, fencing, HVAC equipment and walls.
- ☐ ☐ Drawings accurately representing the changes to the proposed structure, including materials and overall dimensions. Drawings must be to scale.
- ☒ ☐ An official survey plat showing the proposed locations of HVAC units, fences, and sheds.
- ☐ ☐ Historic elevations or photographs should accompany any request to return a structure to an earlier appearance.

BAR CASE# _____
(OFFICE USE ONLY)

ALL APPLICATIONS: *Please read and check that you have read and understand the following items:*

- [x] I understand that after reviewing the proposed alterations, BAR staff will invoice the appropriate filing fee in APEX. The application will not be processed until the fee is paid online.
- [x] I understand the notice requirements and will return a copy of the three respective notice forms to BAR staff at least five days prior to the hearing. If I am unsure to whom I should send notice I will contact Planning and Zoning staff for assistance in identifying adjacent parcels.
- [x] I, the applicant, or an authorized representative will be present at the public hearing.
- [x] I understand that any revisions to this initial application submission (including applications deferred for restudy) must be accompanied by the BAR Supplemental form and revised materials.

The undersigned hereby attests that all of the information herein provided including the site plan, building elevations, prospective drawings of the project, and written descriptive information are true, correct and accurate. The undersigned further understands that, should such information be found incorrect, any action taken by the Board based on such information may be invalidated. The undersigned also hereby grants the City of Alexandria permission to post placard notice as required by Article XI, Division A, Section 11-301(B) of the 1992 Alexandria City Zoning Ordinance, on the property which is the subject of this application. The undersigned also hereby authorizes the City staff and members of the BAR to inspect this site as necessary in the course of research and evaluating the application. The applicant, if other than the property owner, also attests that he/she has obtained permission from the property owner to make this application.

APPLICANT OR AUTHORIZED AGENT:

Signature: Al Cox

Printed Name: Al Cox

Date: 11/4/25

OWNERSHIP AND DISCLOSURE STATEMENT
Use additional sheets if necessary

1. Applicant. State the name, address and percent of ownership of any person or entity owning an interest in the applicant, unless the entity is a corporation or partnership, in which case identify each owner of more than three percent. The term ownership interest shall include any legal or equitable interest held at the time of the application in the real property which is the subject of the application.

Name	Address	Percent of Ownership
1. Al & Kathy Cox	[redacted]	100
2.		
3.		

2. Property. State the name, address and percent of ownership of any person or entity owning an interest in the property located at 311 1/2 N Alfred St (address), unless the entity is a corporation or partnership, in which case identify each owner of more than three percent. The term ownership interest shall include any legal or equitable interest held at the time of the application in the real property which is the subject of the application.

Name	Address	Percent of Ownership
1. Al & Kathy Cox	[redacted]	100
2.		
3.		

3. Business or Financial Relationships. Each person or entity listed above (1 and 2), with an ownership interest in the applicant or in the subject property is required to disclose **any** business or financial relationship, as defined by Section 11-350 of the Zoning Ordinance, existing at the time of this application, or within the12-month period prior to the submission of this application with any member of the Alexandria City Council, Planning Commission, Board of Zoning Appeals or either Boards of Architectural Review.

Name of person or entity	Relationship as defined by Section 11-350 of the Zoning Ordinance	Member of the Approving Body (i.e. City Council, Planning Commission, etc.)
1.		
2.		
3.		

NOTE: Business or financial relationships of the type described in Sec. 11-350 that arise after the filing of this application and before each public hearing must be disclosed prior to the public hearings.

As the applicant or the applicant's authorized agent, I hereby attest to the best of my ability that the information provided above is true and correct.

11/4/25	Al Cox	Al Cox
Date	Printed Name	Signature

New 30” wide x 22” high x 12” deep wall-mounted mini-split HVAC condenser
311
Delete existing HVAC condenser

BAR approved wall-mount
HVAC condenser across the
alley at 308 N Columbus

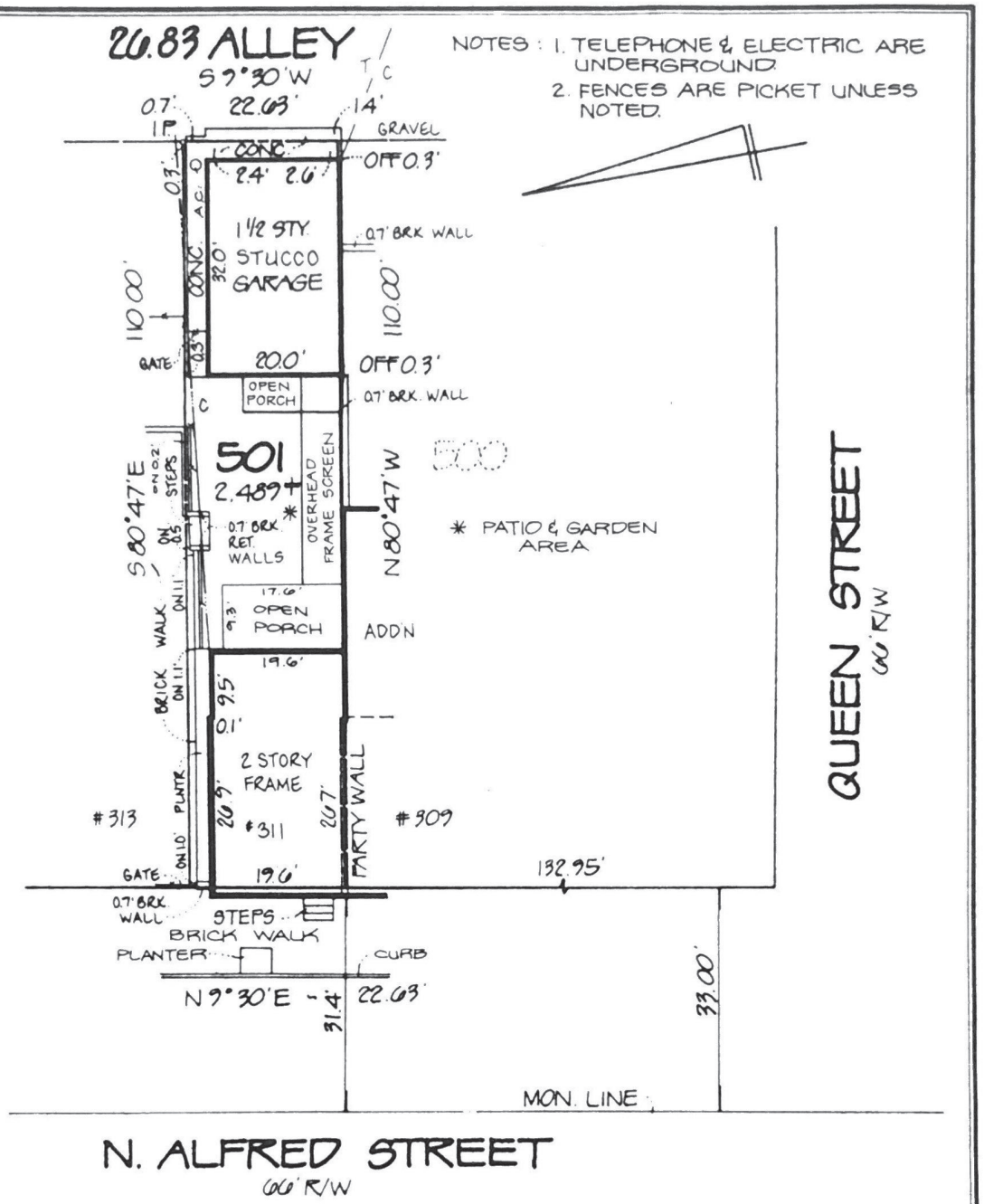

NOTES: 1. TELEPHONE & ELECTRIC ARE UNDERGROUND.
2. FENCES ARE PICKET UNLESS NOTED.

PLAT

SHOWING HOUSE LOCATION ON
LOT 501, SUBDIVISION OF

#309 & 311 N. ALFRED STREET

CITY OF ALEXANDRIA, VIRGINIA

SCALE: 1" = 20' AUGUST 12, 1998
AUGUST 25, 1998 (REVISED)

THIS PROPERTY IS NOT LOCATED IN A SPECIAL FLOOD HAZARD AREA.

PLAT SUBJECT TO RESTRICTIONS OF RECORD.

TITLE REPORT NOT FURNISHED.

I HEREBY CERTIFY THAT THE POSITIONS OF ALL THE EXISTING IMPROVEMENTS HAVE BEEN CAREFULLY ESTABLISHED BY A TRANSIT TAPE SURVEY AND UNLESS OTHERWISE SHOWN, THERE ARE NO VISIBLE ENCROACHMENTS.

Kenneth W. White
KENNETH W. WHITE L.S.

COMMONWEALTH OF VIRGINIA
KENNETH W. WHITE
LICENSE NO. 1277 B
LAND SURVEYOR

CASE NAME:
COX REF.

LAND, CLARK, CARROLL, MENDELSON & BLAIR, P.C.

ALEXANDRIA SURVEYS, INC.
6343 SOUTH KINGS HIGHWAY
ALEXANDRIA, VIRGINIA 22306
703-660-6615
FAX 703-768-7764

COPYRIGHT BY ALEXANDRIA SURVEYS, INC. THE INFORMATION CONTAINED ON THIS DOCUMENT MAY NOT BE COPIED, REPRODUCED OR ALTERED IN ANY FORM WITHOUT PERMISSION IN WRITING FROM THE COPYRIGHT OWNER

19980722025

CH-RLS18MIA-230VO + CH-RLS18MIA-230VI

Job Name:	**Date:**
Location:	**Approval:**
Engineer:	**Construction:**
Submitted to:	**Unit #:**
Submitted by:	**Drawing #:**
Reference:	

KEY FEATURES:

- Auto-Swing for horizontal louvers
- Smart Kit Ready
- Turbo Mode
- Follow Me Mode
- Smart kit Included

NOTES:

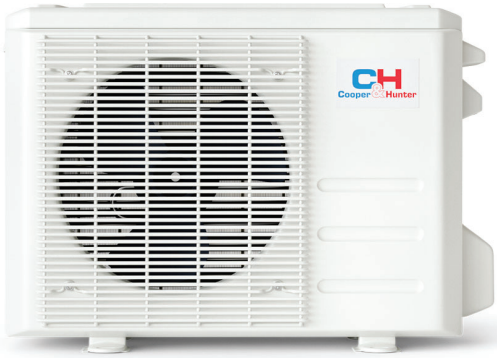

Cooper&Hunter products are subject to continuous improvements. Cooper&Hunter reserves the right to modify product design, specifications and information in this data sheet without notice and without incurring any obligations. Actual unit design may differ from images shown in this submittal sheet.

CH-RLS18MIA-230VO + CH-RLS18MIA-230VI

Indoor Model			**CH-RLS18MIA-230VI**
Power supply		V, Ph, Hz	208-230V, 1Ph, 60Hz
Communication wiring			AWG 14-4
Cooling	Capacity	Btu/h	18,000 (4,100~19,000)
	Input	w	1,667 (365~1,720)
	Rated current	A	7.2 (1.7~7.6)
	EER/EER2	Btu/w	
	SEER/SEER2	Btu/w	
Heating at 47 °F	Capacity	Btu/h	18,800 (6,200~20,200)
	Input	W	1,801 (380~1,850)
	Rated current	A	8.1 (2.1~8.2)
	COP	W/W	03.06
	HSPF4/HSPF2-4		9.6
	HSPF5/HSPF2-5		7.5
Indoor fan motor		Qty	1
		Input	30
		RLA	0.5
Indoor air flow (Turbo/Hi/Med/Lo) (No duct)		CFM	429.7 / 388.5 / 259 / 217.8
ESP (range)		ln.wg.	/
Indoor noise level (Hi/Med/Lo)		dB(A)	45/36/24
Dehumidification		L/H	5.29
Indoor unit	Dimensions (WxDxH)	inch	37.99 x 8.46 x 12.56
	Packing (WxDxH)	inch	41.14 x 12.01 x 16.14
	Net/Gross weight	lbs	24.47/32.63
Drainage water pipe diameter		inch	5/8"
Refrigerant piping (Liquid side/Gas side)		inch	1/4"/1/2"
Design pressure		PSIG	550/340
Controller			remote controller
Room temperature	Cooling	F	60~90
	Heating	F	32~86

Cooper&Hunter products are subject to continuous improvements. Cooper&Hunter reserves the right to modify product design, specifications and information in this data sheet without notice and without incurring any obligations. Actual unit design may differ from images shown in this submittal sheet.

Outdoor Model			**CH-RLS18MIA-230VO**
Power supply		V, Ph, Hz	208-230V, 1Ph, 60Hz
Min. circuit ampacity		A	15
Max. fuse		A	20
Compressor	Model		KSN140D21UFZ
	Type		ROTARY
	Brand		GMCC
	Capacity	Btu/h	14.96
	Input	w	1.14
	Rated current (RLA)	A	7.5
	Refrigerant oil	oz	VG74 14.9
Outdoor fan motor	Qty		1
	Input	w	34
	RLA	A	0.4
	Speed	r/min	840/650
Outdoor air flow (Max)		CFM	1,235.3
Outdoor noise level (Max)		dB(A)	56
Throttle type			Capillary
Outdoor unit	Dimensions (WxDxH)	inch	31.69 x 12.99 x 21.81
	Packing (WxDxH)	inch	37.00 x 16.14 x 23.82
	Net/Gross weight	inch	72.31/78.48
Refrigerant	Type		R454B
	Precharge	ft	25
Additional charge for 1/4 inch liquid pipe		oz	0.16
Additional charge for 3/8 inch liquid pipe		oz	/
Refrigerant piping	Liquid side/Gas side	inch	1/4"/1/2"
	Max. pipe length	ft	98.4
	Max. difference in level	ft	65.6
Ambient temperature	Cooling	F	5 ~ 122
	Heating	F	5 ~ 75

Cooper&Hunter products are subject to continuous improvements. Cooper&Hunter reserves the right to modify product design, specifications and information in this data sheet without notice and without incurring any obligations. Actual unit design may differ from images shown in this submittal sheet.

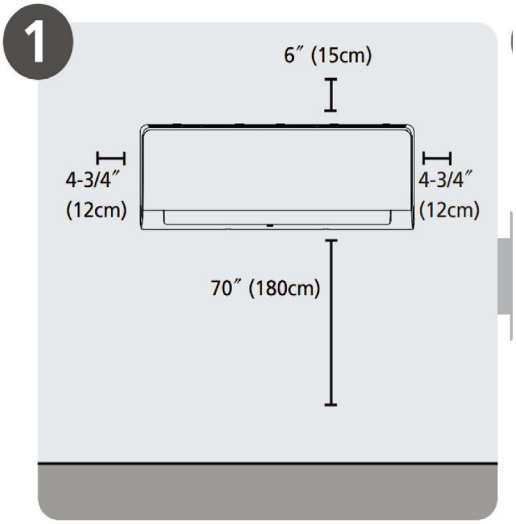

Select Installation Location

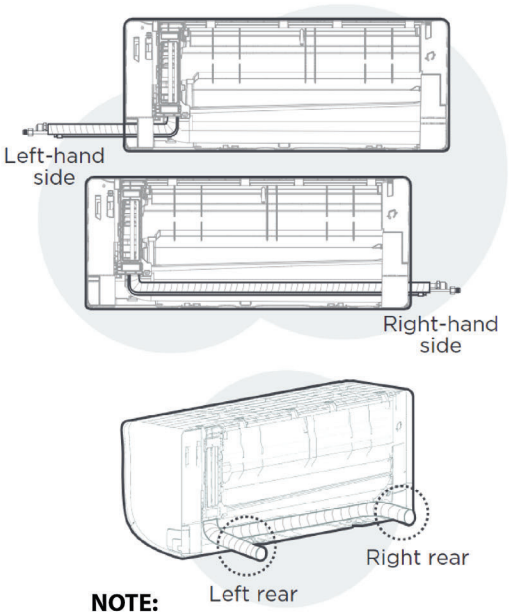

NOTE:
Based on the position of the wall hole relative to the mounting plate, choose the side from which the piping will exit the unit. You have four options for the exit direction of the piping.

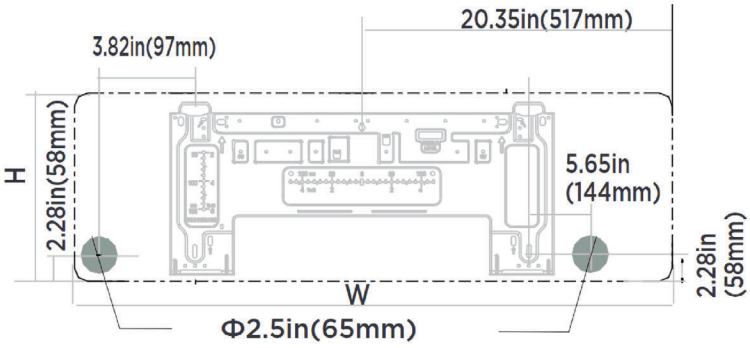

Indoor unit dimensions(WxH):
37.99in(965mm)x12.56in(319mm)

NOTE:
When the gas side connective pipe isΦ (5/8in)16mm or more, the wall hole shouldbe (3-1/2in)90mm.

Cooper&Hunter products are subject to continuous improvements. Cooper&Hunter reserves the right to modify product design, specifications and information in this data sheet without notice and without incurring any obligations. Actual unit design may differ from images shown in this submittal sheet.

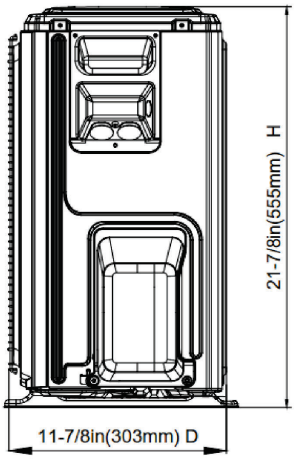

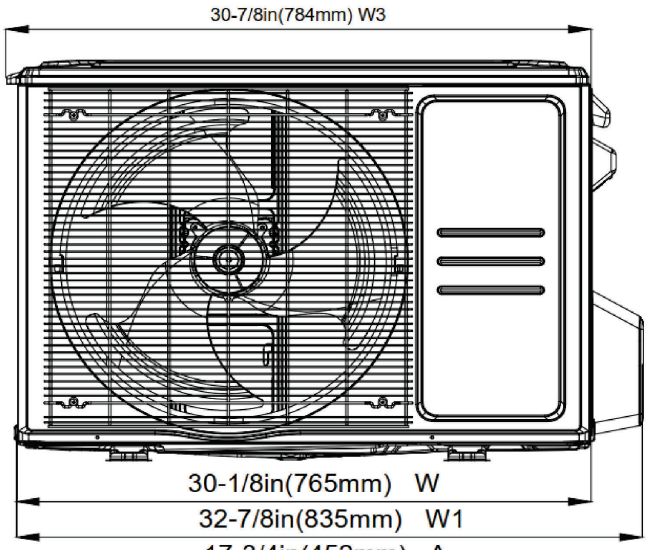

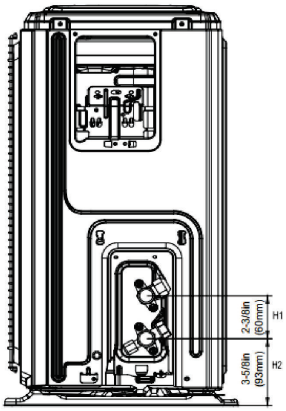

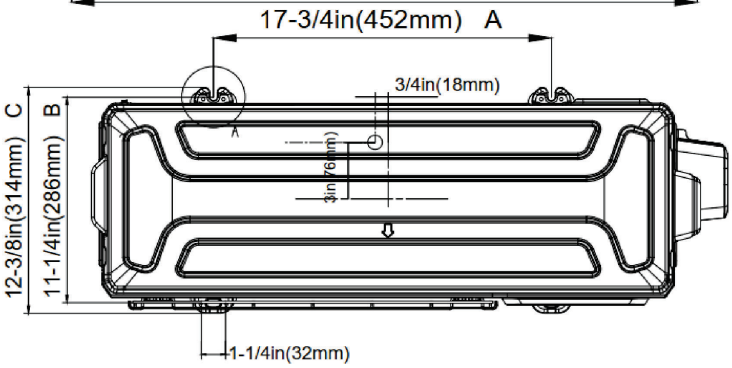

DETAIL A
SCALE 1:2

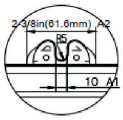

Cooper&Hunter products are subject to continuous improvements. Cooper&Hunter reserves the right to modify product design, specifications and information in this data sheet without notice and without incurring any obligations. Actual unit design may differ from images shown in this submittal sheet.