BAR CASE# _____
(OFFICE USE ONLY)

ADDRESS OF PROJECT: 806 S Fairfax St. Alexandria, VA 22314

DISTRICT: ■ **Old & Historic Alexandria** ☐ **Parker – Gray** ☐ **100 Year Old Building**

TAX MAP AND PARCEL: 12396500 - 080.04-06-02 **ZONING:** _____

APPLICATION FOR: *(Please check all that apply)*

■ CERTIFICATE OF APPROPRIATENESS

☐ PERMIT TO MOVE, REMOVE, ENCAPSULATE OR DEMOLISH
(Required if more than 25 square feet of a structure is to be demolished/impacted)

☐ WAIVER OF VISION CLEARANCE REQUIREMENT and/or YARD REQUIREMENTS IN A VISION CLEARANCE AREA (Section 7-802, Alexandria 1992 Zoning Ordinance)

☐ WAIVER OF ROOFTOP HVAC SCREENING REQUIREMENT
(Section 6-403(B)(3), Alexandria 1992 Zoning Ordinance)

Applicant: ☐ Property Owner ■ Business *(Please provide business name & contact person)*

Name: Solar Energy World

Address [redacted]

City:

Phone: [redacted]

Authorized Agent *(if applicable)*: ☐ Attorney ☐ Architect ☐ _____

Name: Joann Peton Phone: [redacted]

E-mail [redacted]

Legal Property Owner:

Name: Schultz Thomas W

Addres [redacted]

City:

Phone:

BAR CASE# _____
(OFFICE USE ONLY)

NATURE OF PROPOSED WORK: *Please check all that apply*

☐ NEW CONSTRUCTION
☐ EXTERIOR ALTERATION: *Please check all that apply.*

☐ awning	☐ fence, gate or garden wall	☐ HVAC equipment	☐ shutters
☐ doors	☐ windows	☐ siding	☐ shed
☐ lighting	☐ pergola/trellis	☐ painting unpainted masonry	

☒ other Solar Panels
☐ ADDITION
☐ DEMOLITION/ENCAPSULATION
☐ SIGNAGE

DESCRIPTION OF PROPOSED WORK: *Please describe the proposed work in detail (Additional pages may be attached).*

Install (9) roof mounted solar panels, 3.96kW

SUBMITTAL REQUIREMENTS:

☐ Check this box if there is a homeowner's association for this property. If so, you must attach a copy of the letter approving the project.

Items listed below comprise the **minimum supporting materials** for BAR applications. Staff may request additional information during application review. Please refer to the relevant section of the *Design Guidelines* for further information on appropriate treatments.

Applicants must use the checklist below to ensure the application is complete. Include all information and material that are necessary to thoroughly describe the project. Incomplete applications will delay the docketing of the application for review. Pre-application meetings are required for all proposed additions. All applicants are encouraged to meet with staff prior to submission of a completed application.

Demolition/Encapsulation : *All applicants requesting 25 square feet or more of demolition/encapsulation must complete this section. Check N/A if an item in this section does not apply to your project.*

	N/A	
☐	☐	Survey plat showing the extent of the proposed demolition/encapsulation.
☐	☐	Existing elevation drawings clearly showing all elements proposed for demolition/encapsulation.
☐	☐	Clear and labeled photographs of all elevations of the building if the entire structure is proposed to be demolished.
☐	☐	Description of the reason for demolition/encapsulation.
☐	☐	Description of the alternatives to demolition/encapsulation and why such alternatives are not considered feasible.

BAR CASE# _____
(OFFICE USE ONLY)

Additions & New Construction: *Drawings must be to scale and should not exceed 11" x 17" unless approved by staff. Check N/A if an item in this section does not apply to your project.*

	N/A	
☐	■	Scaled survey plat showing dimensions of lot and location of existing building and other structures on the lot, location of proposed structure or addition, dimensions of existing structure(s), proposed addition or new construction, and all exterior, ground and roof mounted equipment.
☐	☐	FAR & Open Space calculation form.
☐	☐	Clear and labeled photographs of the site, surrounding properties and existing structures, if applicable.
☐	☐	Existing elevations must be scaled and include dimensions.
☐	☐	Proposed elevations must be scaled and include dimensions. Include the relationship to adjacent structures in plan and elevations.
☐	☐	Materials and colors to be used must be specified and delineated on the drawings. Actual samples may be provided or required.
☐	☐	Manufacturer's specifications for materials to include, but not limited to: roofing, siding, windows, doors, lighting, fencing, HVAC equipment and walls.
☐	☐	For development site plan projects, a model showing mass relationships to adjacent properties and structures.

Signs & Awnings: *One sign per building under one square foot does not require BAR approval unless illuminated. All other signs including window signs require BAR approval. Check N/A if an item in this section does not apply to your project.*

	N/A	
☐	■	Linear feet of building: Front:_____Secondary front (if corner lot):_____.
☐	☐	Square feet of existing signs to remain:_____.
☐	☐	Photograph of building showing existing conditions.
☐	☐	Dimensioned drawings of proposed sign identifying materials, color, lettering style and text.
☐	☐	Location of sign (show exact location on building including the height above sidewalk).
☐	☐	Means of attachment (drawing or manufacturer's cut sheet of bracket if applicable).
☐	☐	Description of lighting (if applicable). Include manufacturer's cut sheet for any new lighting fixtures and information detailing how it will be attached to the building's facade.

Alterations: *Check N/A if an item in this section does not apply to your project.*

	N/A	
☐	☐	Clear and labeled photographs of the site, especially the area being impacted by the alterations, all sides of the building and any pertinent details.
☐	☐	Manufacturer's specifications for materials to include, but not limited to: roofing, siding, windows, doors, lighting, fencing, HVAC equipment and walls.
☐	☐	Drawings accurately representing the changes to the proposed structure, including materials and overall dimensions. Drawings must be to scale.
☐	☐	An official survey plat showing the proposed locations of HVAC units, fences, and sheds.
☐	☐	Historic elevations or photographs should accompany any request to return a structure to an earlier appearance.

BAR CASE# _____
(OFFICE USE ONLY)

ALL APPLICATIONS: *Please read and check that you have read and understand the following items:*

- [x] I understand that after reviewing the proposed alterations, BAR staff will invoice the appropriate filing fee in APEX. The application will not be processed until the fee is paid online.
- [x] I understand the notice requirements and will return a copy of the three respective notice forms to BAR staff at least five days prior to the hearing. If I am unsure to whom I should send notice I will contact Planning and Zoning staff for assistance in identifying adjacent parcels.
- [x] I, the applicant, or an authorized representative will be present at the public hearing.
- [x] I understand that any revisions to this initial application submission (including applications deferred for restudy) must be accompanied by the BAR Supplemental form and revised materials.

The undersigned hereby attests that all of the information herein provided including the site plan, building elevations, prospective drawings of the project, and written descriptive information are true, correct and accurate. The undersigned further understands that, should such information be found incorrect, any action taken by the Board based on such information may be invalidated. The undersigned also hereby grants the City of Alexandria permission to post placard notice as required by Article XI, Division A, Section 11-301(B) of the 1992 Alexandria City Zoning Ordinance, on the property which is the subject of this application. The undersigned also hereby authorizes the City staff and members of the BAR to inspect this site as necessary in the course of research and evaluating the application. The applicant, if other than the property owner, also attests that he/she has obtained permission from the property owner to make this application.

APPLICANT OR AUTHORIZED AGENT:

Signature: Joann Peton

Printed Name: Joann Peton

Date: 06-17-2026

OWNERSHIP AND DISCLOSURE STATEMENT
Use additional sheets if necessary

1. Applicant. State the name, address and percent of ownership of any person or entity owning an interest in the applicant, unless the entity is a corporation or partnership, in which case identify each owner of more than three percent. The term ownership interest shall include any legal or equitable interest held at the time of the application in the real property which is the subject of the application.

Name	Address	Percent of Ownership
1. THOMAS SCHULTZ	806 S FAIRFAX ST ALEXANDRIA, VA 22314	100%
2.		
3.		

2. Property. State the name, address and percent of ownership of any person or entity owning an interest in the property located at 806 S FAIRFAX ST (address), unless the entity is a corporation or partnership, in which case identify each owner of more than three percent. The term ownership interest shall include any legal or equitable interest held at the time of the application in the real property which is the subject of the application.

Name	Address	Percent of Ownership
1. THOMAS SCHULTZ	806 S FAIRFAX ST ALEXANDRIA, VA 22314	100%
2.		
3.		

3. Business or Financial Relationships. Each person or entity listed above (1 and 2), with an ownership interest in the applicant or in the subject property is required to disclose any business or financial relationship, as defined by Section 11-350 of the Zoning Ordinance, existing at the time of this application, or within the 12-month period prior to the submission of this application with any member of the Alexandria City Council, Planning Commission, Board of Zoning Appeals or either Boards of Architectural Review.

Name of person or entity	Relationship as defined by Section 11-350 of the Zoning Ordinance	Member of the Approving Body (i.e. City Council, Planning Commission, etc.)
1.		
2.		
3.		

NOTE: Business or financial relationships of the type described in Sec. 11-350 that arise after the filing of this application and before each public hearing must be disclosed prior to the public hearings.

As the applicant or the applicant's authorized agent, I hereby attest to the best of my ability that the information provided above is true and correct.

7/9/26 THOMAS SCHULTZ

Date Printed Name Signature

DAVID C. HERNANDEZ, PE

[redacted]

DATE: June 2, 2026

RE: 806 S Fairfax St, Alexandria, VA 22314, USA

To Whom It May Concern,

As per your request, Exactus Energy has conducted a site assessment of the building at the above address.

PV solar panels are proposed to be installed on roof areas as shown in the submitted plans The panels are attached to the roof decking with a rail-less mounting system. The PV system (PV modules, racking, mounting hardware, etc.) shall be installed according to the manufacturer's approved installation specifications. The Engineer of Record and Exactus Energy claim no responsibility for misuse or improper installation.

It was found that the roof structures satisfactorily meet the applicable standards included in the 2021 IBC/IRC, 2021 IEBC, and ASCE 7-16 as well as the design criteria shown below:

,
Design Criteria:

Risk Category	= II
Exposure Category	= B
Wind speed	= 115 mph
Ground snow load	= 30 psf
Roof dead load	= 9 psf
Solar system dead load	= 3 psf

Overall, the roof systems integrity is adequate to support the PV alteration with no modifications or reinforcements as required per 2021 IEBC Sections 502.4 and 502.5.

This letter was completed in accordance to recognized design standards, professional engineering experience, and judgement. Prior to installation, the on-site contractor must notify Exactus Energy if there are any discrepancies, or damages to the members, that was not addressed in the plan set.

If you have any further questions, please do not hesitate to contact me.

Acknowledged by:

David C. Hernandez, PE Digitally signed by David C. Hernandez, PE
Date: 2026.06.03 16:24:29 -04:00

aee Green Building Engineer #832
COMMONWEALTH OF VIRGINIA
DAVID C. HERNANDEZ
Lic. No. 0402057828
PROFESSIONAL ENGINEER
Exp. 05/31/27
06/03/26

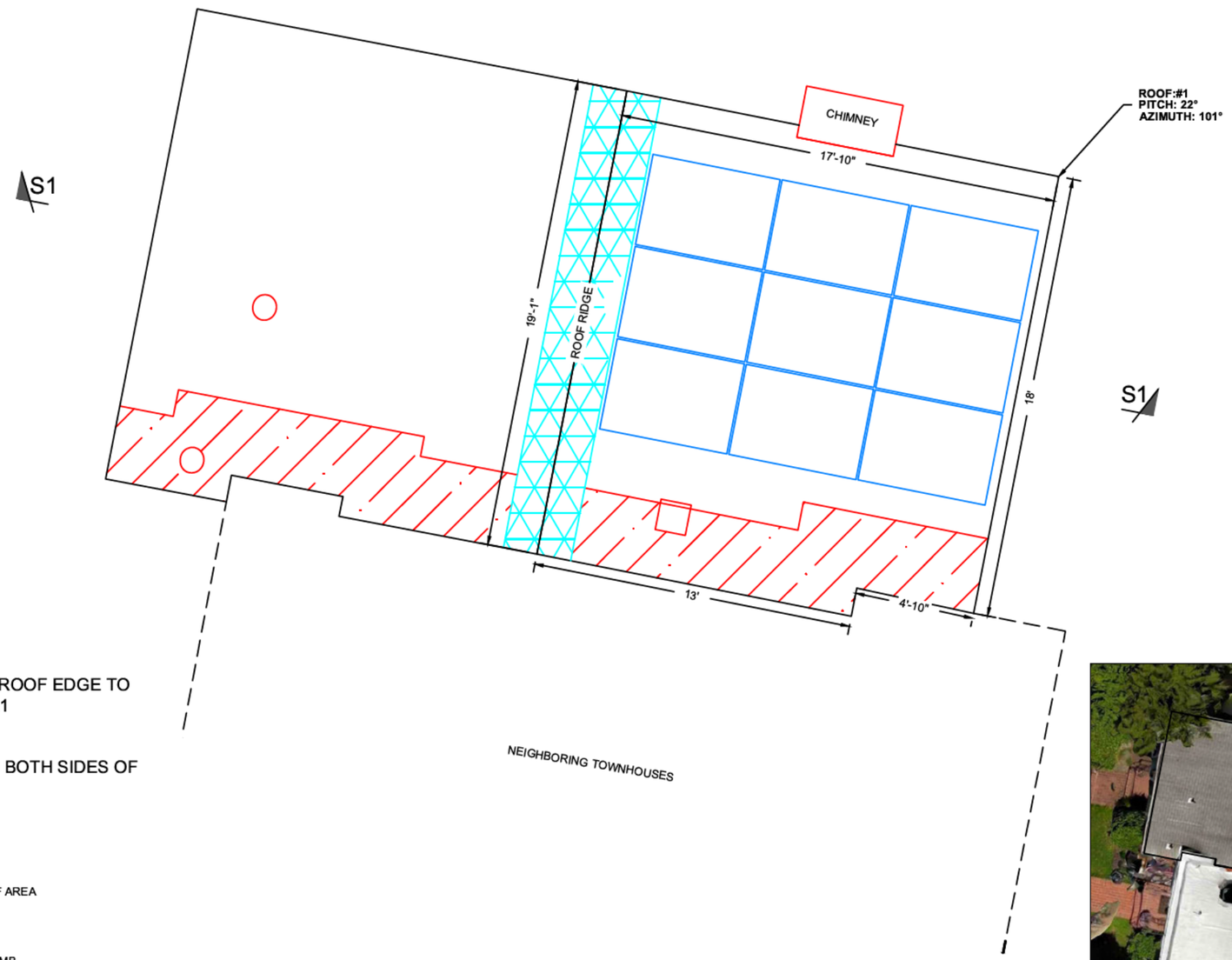

N
S

KEY FIRE SAFETY ZONE

3' PATHWAYS FROM LOWEST ROOF EDGE TO RIDGE PROVIDED PER R324.6.1

1'6" PATHWAYS PROVIDED ON BOTH SIDES OF RIDGE PER R324.6.2

PLAN VIEW TOTAL ROOF AREA: 724 SQFT

SOLAR ARRAY AREA: 189.00 SQFT

THE SOLAR ARRAY IS 26.1% OF THE PLAN VIEW TOTAL ROOF AREA

NOTES:

1. THE SYSTEM SHALL INCLUDE (9) JA SOLAR JAM54D41-440 MB.
2. SNAPNRACK TOPSPEED WILL BE INSTALLED IN ACCORDANCE WITH SNAPNRACK INSTALLATION MANUAL.
3. REFER TO STRUCTURAL DRAWING FOR SECTIONS MARKED AND ADDITIONAL NOTES.

SOLAR PANEL LAYOUT

Scale: 3/16" = 1'-0"

COMMONWEALTH OF VIRGINIA
DAVID C. HERNANDEZ
Lic. No. 0402057828
Exp. 05/31/27
PROFESSIONAL ENGINEER

SolarEnergyWorld
Because Tomorrow Matters

Solar Energy World LLC.
14880 Sweitzer Lane
Laurel, MD 20707
(888) 497-3233

Disclaimer:
This drawing is the property of Solar Energy World Inc. The information herein contained shall be used for the sole benefit of Solar Energy World. It shall not be disclosed to others outside the recipient's organization, in whole or in part, without the written permission of Solar Energy World, except in connection with the sale and use of the respective Solar Energy equipment.

Building Code: International Residential Code (IRC) 2021

Electrical Code: National Electrical Code (NEC) 2020

Wind Speed	Snow Load
115 MPH	30 PSF

Modules: (9) JA SOLAR JAM54D41-440 MB

Inverter(s): (9) ENPHASE IQ8MC-72-M-US

DC System Size	AC System Size
3.960 kW	2.880 kW

Customer Information: Thomas Schultz
806 S Fairfax St,
Alexandria, VA, 22314

Partner/Lender: None

AHJ	Utility
Alexandria City	Dominion VA

Sheet Name: Solar Panel Layout

Drawn By	Date
TR	June 2, 2026

Scale	Job Number	Sheet
AS NOTED	VA31347	A-1

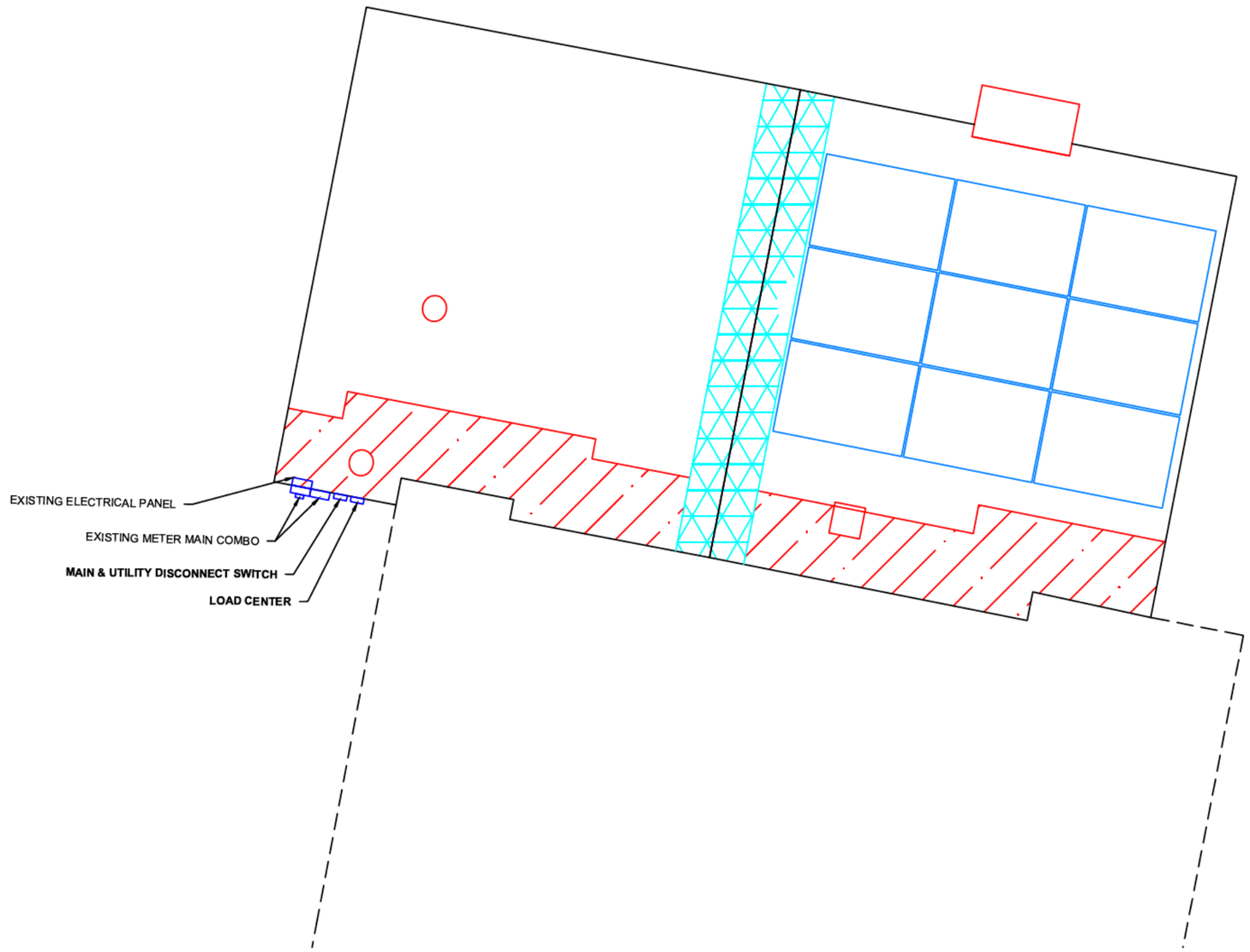

EQUIPMENT LOCATION PLAN

Scale: NTS

NOTE:

EQUIPMENT LOCATION PLAN IS APPROXIMATE, EXACT LOCATION TO BE VERIFIED WITH INSTALLATION CREW AND HOME OWNER AT THE TIME OF INSTALLATION.

COMMONWEALTH OF VIRGINIA
DAVID C. HERNANDEZ
Lic. No. 0402057828
Exp. 05/31/27
PROFESSIONAL ENGINEER

SolarEnergyWorld
Because Tomorrow Matters

Solar Energy World LLC.
14880 Sweitzer Lane
Laurel, MD 20707
(888) 497-3233

Disclaimer:
This drawing is the property of Solar Energy World Inc. The information herein contained shall be used for the sole benefit of Solar Energy World. It shall not be disclosed to others outside the recipient's organization, in whole or in part, without the written permission of Solar Energy World, except in connection with the sale and use of the respective Solar Energy equipment.

Building Code	International Residential Code (IRC) 2021
Electrical Code	National Electrical Code (NEC) 2020
Wind Speed: 115 MPH	Snow Load: 30 PSF
Modules	(9) JA SOLAR JAM54D41-440 MB
Inverter(s)	(9) ENPHASE IQ8MC-72-M-US
DC System Size: 3.960 kW	AC System Size: 2.880 kW
Customer Information	Thomas Schultz 806 S Fairfax St, Alexandria, VA, 22314
Partner/Lender	None
AHJ: Alexandria City	Utility: Dominion VA
Sheet Name	Equipment Location Plan
Drawn By: TR	Date: June 2, 2026
Scale: AS NOTED	Job Number: VA31347
Sheet	E-1

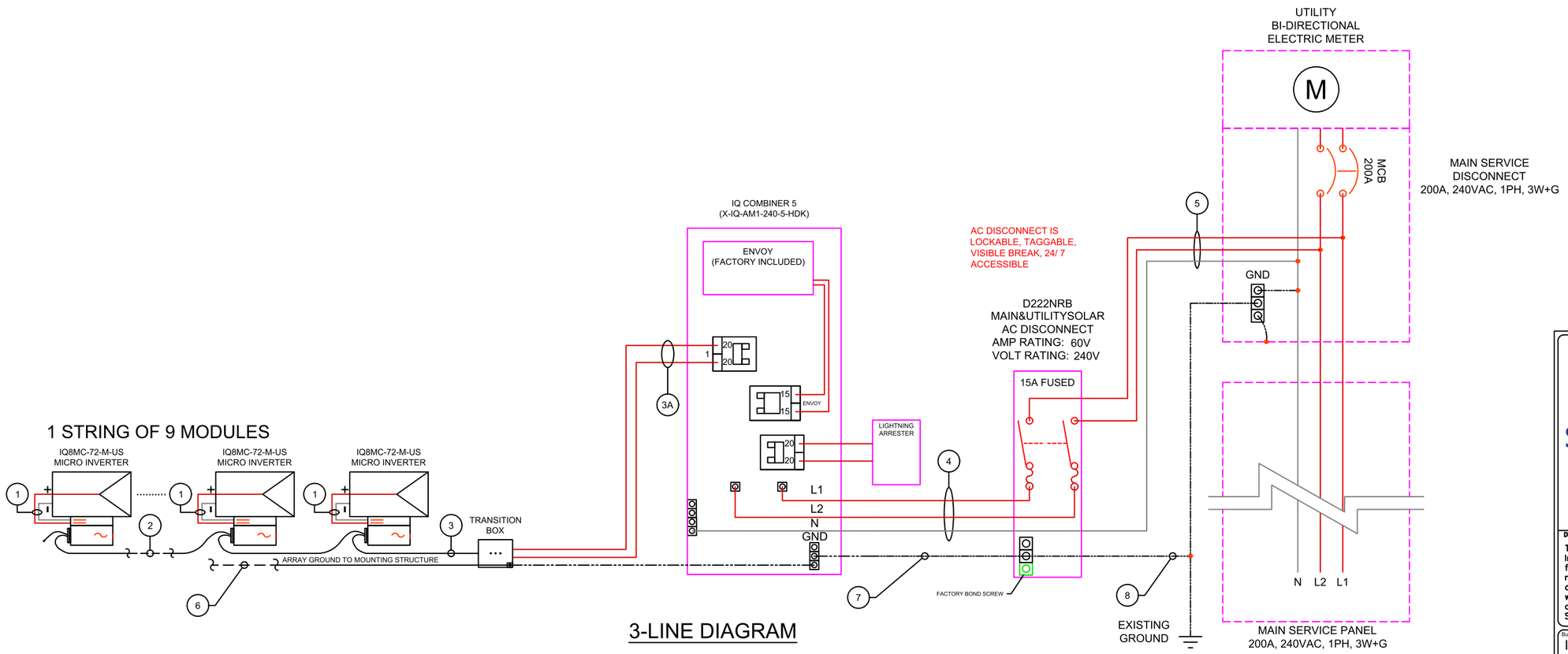

3-LINE DIAGRAM

MODULE SPECIFICATIONS	
MODEL NUMBER	JAM54D41-440 MB
PEAK POWER	440 W
RATED VOLTAGE (Vmpp)	33.37 V
RATED CURRENT (Imp)	13.18 A
OPEN CIRCUIT VOLTAGE (Voc)	39.38 V
SHORT CIRCUIT CURRENT (Isc)	13.85 A
MAXIMUM SYSTEM VOLTAGE	1500VDC
INVERTER SPECIFICATIONS	
MODEL NUMBER	IQ8MC-72-M-US
MAXIMUM DC VOLTAGE	60 V
MAXIMUM POWER OUTPUT	320 W
NOMINAL AC VOLTAGE	240 VAC
MAXIMUM AC CURRENT	1.33 A
CEC EFFICIENCY	97.0%
ARRAY DETAILS	
NO. OF MODULES PER STRING	9
NO. OF STRINGS	1
ARRAY WATTS AT STC	3960

WIRE/CONDUIT SCHEDULE ARRAY			
TAG	DESCRIPTION	WIRE SIZE/TYPE	NOTES
1	Panel to Micro Inverter	PV Wire (Factory Made)	INTEGRATED
2	Micro Inverter to Micro Inverter	Pre-Manufactured Cable	
3	Micro Inverter to Transition Box	Pre-Manufactured Cable	
3A	Transition Box to Load Center	#10 THHN/THWN-2	
4	Load Center to AC Disconnect	#10 Cu THHN/THWN-2	
5	AC Disconnect to Interconnection Point	#6 Cu THHN/THWN-2	
6	Equipment Grounding Conductor	#8 Cu Bare Copper Wire	
7	Equipment Grounding Conductor	#8 Cu THHN/THWN-2	
8	Grounding Electrode Conductor	#6 Cu	

GENERAL ELECTRIC NOTES: NEC2020

1. EQUIPMENT USED SHALL BE NEW, UNLESS OTHERWISE NOTED.
2. EQUIPMENT USED SHALL BE UL LISTED, UNLESS OTHERWISE NOTED.
3. EQUIPMENT SHALL BE INSTALLED PROVIDING ADEQUATE PHYSICAL WORKING SPACE AROUND THE EQUIPMENT AND SHALL COMPLY WITH NEC.
4. COPPER CONDUCTORS SHALL BE USED AND SHALL HAVE AN INSULATION RATING OF 600V, 90°C, UNLESS OTHERWISE NOTED
5. CONDUCTORS SHALL BE SIZED IN ACCORDANCE TO THE NEC. CONDUCTORS AMPACITY SHALL BE DE-RATED FOR TEMPERATURE INCREASE, CONDUIT FILL AND VOLTAGE DROP.
6. ALL CONDUCTORS, EXCEPT PV WIRE SHALL BE INSTALLED IN APPROVED CONDUITS OR RACEWAY. CONDUITS SHALL BE ADEQUATELY SUPPORTED AS PER NEC.
7. AC DISCONNECT SHOWN IS REQUIRED IF THE UTILITY REQUIRES VISIBLE-BLADE SWITCH.
8. EXPOSED NON-CURRENT CARRYING METAL PARTS SHALL BE GROUNDED AS PER NEC.
9. LINE SIDE INTER-CONNECTION SHALL COMPLY WITH NEC.
10. SMS MONITORING SYSTEM AND IT'S CONNECTION SHOWN IS OPTIONAL. IF USED, REFER TO SMS INSTALLATION MANUAL FOR WIRING METHODS AND OPERATION PROCEDURE.
11. ASHRAE FUNDAMENTAL OUTDOOR DESIGN TEMPERATURES DO NOT EXCEED 47°C IN THE U.S. (PHOENIX, AZ OR PALM SPRINGS, CA)
12. FOR LESS THAN 9 CURRENT-CARRYING CONDUCTORS IN ROOF MOUNTED SUNLIGHT CONDUIT USING THE OUTDOOR TEMPERATURE OF 47°C
    12.1. 10AWG CONDUCTOR ARE GENERALLY ACCEPTABLE FOR MODULES WITH AN Isc OF 9.6 AMPS WITH A 15 AMP FUSE.

WIRE SIZING FOR OCPD
EX (Isc *(1.25)(1.25)(# OF STRINGS IN PARALLEL) = WIRE AMPACITY OR USING NEC TABLE 690.8

SolarEnergyWorld
Because Tomorrow Matters
Solar Energy World LLC.
14880 Sweitzer Lane
Laurel, MD 20707
(888) 497-3233

Disclaimer:
This drawing is the property of Solar Energy World Inc. The information herein contained shall be used for the sole benefit of Solar Energy World. It shall not be disclosed to others outside the recipient's organization, in whole or in part, without the written permission of Solar Energy World, except in connection with the sale and use of the respective Solar Energy equipment.

Building Code: International Residential Code (IRC) 2021
Electrical Code: National Electrical Code (NEC) 2020
Wind Speed: 115 MPH
Snow Load: 30 PSF
Modules: (9) JA SOLAR JAM54D41-440 MB
Inverter(s): (9) ENPHASE IQ8MC-72-M-US
DC System Size: 3.960 kW
AC System Size: 2.880 kW

Customer Information:
Thomas Schultz
806 S Fairfax St,
Alexandria, VA, 22314

Partner/Lender: None
AHJ: Alexandria City
Utility: Dominion VA
Sheet Name: Electrical 3-Line Diagram
Drawn By: TR
Date: June 2, 2026
Scale: AS NOTED
Job Number: VA31347
Sheet: E-2

CAUTION

SOLAR CIRCUIT

CAUTION

PHOTOVOLTAIC POWER SOURCE

LABEL LOCATION:
CONDUIT (10' SPACING)
(PER CODE: NEC 690.31 (D)(2))

WARNING

ELECTRIC SHOCK HAZARD
THE CONDUCTORS OF THIS PHOTOVOLTAIC SYSTEM ARE UNGROUNDED AND MAY BE ENERGIZED

LABEL LOCATION:
ALL SOLAR JUNCTION BOXES
(PER CODE: NEC 690.13 (B))

WARNING

INVERTER OUTPUT CONNECTION
DO NOT RELOCATE THIS OVERCURRENT DEVICE

LABEL LOCATION:
AC DISCONNECT
(PER CODE: NEC 705.12 (B)(3)(2))

MAIN PHOTOVOLTAIC SYSTEM DISCONNECT

LABEL LOCATION:
SOLAR MAIN DISCONNECT
(PER CODE: NEC 690.13 (B))

PHOTOVOLTAIC DISCONNECT FOR UTILITY OPERATION

LABEL LOCATION:
UTILITY DISCONNECT
(PER CODE: NEC 690.59)

WARNING

AC VOLTAGE = 240V
MAX FUSE: 15 A
RATED AC OUTPUT CURRENT: 11.97 A

LABEL LOCATION:
PV AC DISCONNECT
(PER CODE: NEC 690.54)

WARNING

DUAL POWER SOURCE
SECOND SOURCE IS PV SYSTEM

LABEL LOCATION:
ELECTRICAL PANELS
(PER CODE: NEC 690.59 & NEC 705.12 (C))

EMERGENCY DISCONNECT
SERVICE DISCONNECT

LABEL LOCATION:
RELOCATED MAIN SERVICE ENTRANCE
(PER CODE: NEC 230.85)

SOLAR PV SYSTEM EQUIPPED WITH RAPID SHUTDOWN

TURN RAPID SHUTDOWN SWITCH TO THE "OFF" POSITION TO SHUTDOWN PV SYSTEM AND REDUCE SHOCK HAZARD IN ARRAY

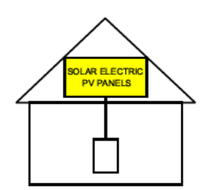

LABEL LOCATION:
DC DISCONNECT
(PER CODE: NEC 690.56 (C))

SolarEnergyWorld
Tomorrow's Energy Today

Solar System Installed by Solar Energy World
(410)579-2009
www.SolarEnergyWorld.com

INFORMATIONAL NOTE: LABELS TO COMPLY WITH NEC110.21(B)

SolarEnergyWorld
Because Tomorrow Matters

Solar Energy World LLC.
14880 Sweitzer Lane
Laurel, MD 20707
(888) 497-3233

Disclaimer:
This drawing is the property of Solar Energy World Inc. The information herein contained shall be used for the sole benefit of Solar Energy World. It shall not be disclosed to others outside the recipient's organization, in whole or in part, without the written permission of Solar Energy World, except in connection with the sale and use of the respective Solar Energy equipment.

Building Code	International Residential Code (IRC) 2021
Electrical Code	National Electrical Code (NEC) 2020
Wind Speed: 115 MPH	Snow Load: 30 PSF
Modules	(9) JA SOLAR JAM54D41-440 MB
Inverter(s)	(9) ENPHASE IQ8MC-72-M-US
DC System Size: 3.960 kW	AC System Size: 2.880 kW
Customer Information	Thomas Schultz 806 S Fairfax St, Alexandria, VA, 22314
Partner/Lender	None
AHJ: Alexandria City	Utility: Dominion VA
Sheet Name	Labels
Drawn By: TR	Date: June 2, 2026
Scale: AS NOTED	Job Number: VA31347
Sheet	E-3

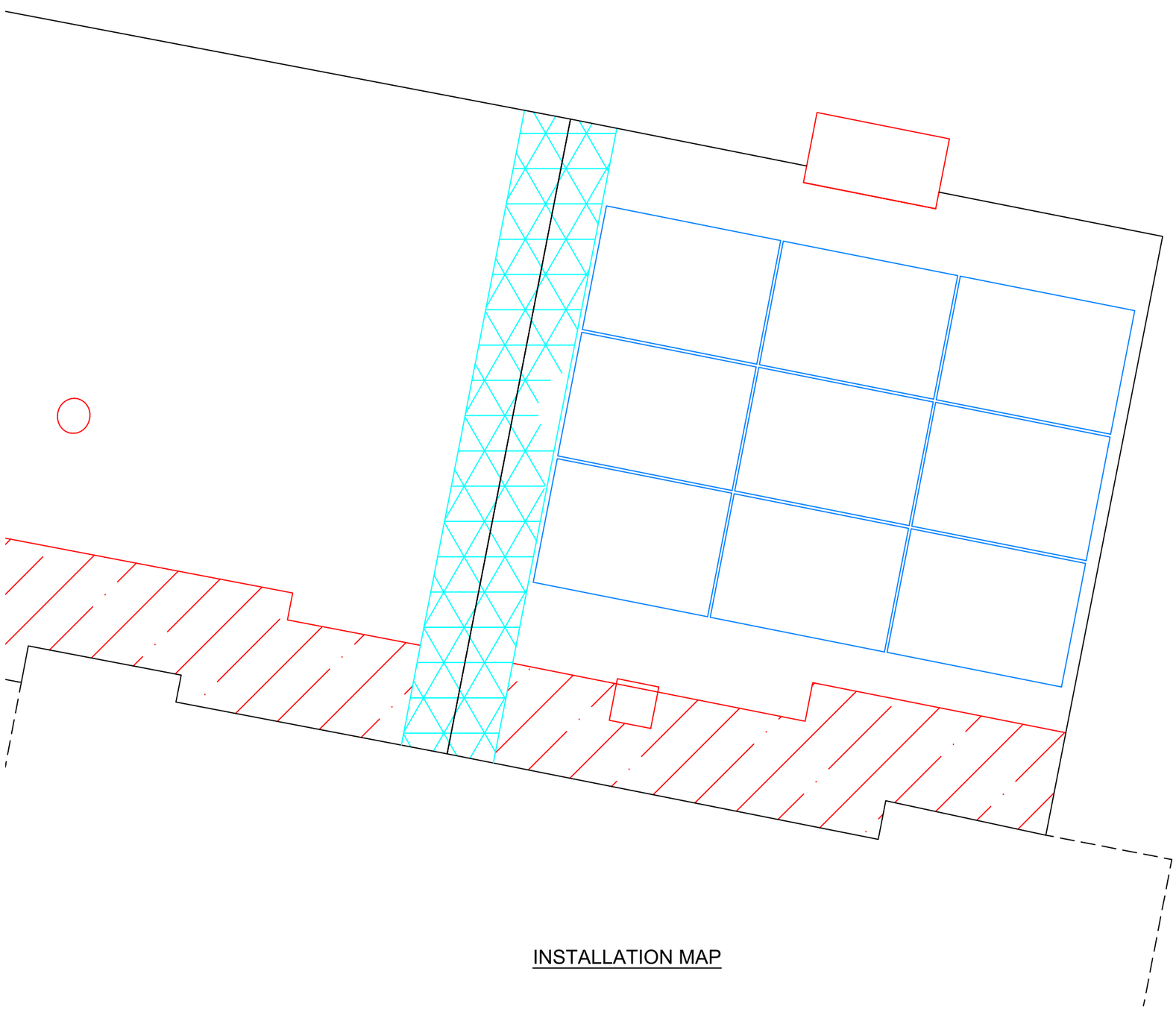

INSTALLATION MAP

1
2
3
4
5
6
7
8
9

SolarEnergyWorld
Because Tomorrow Matters

Solar Energy World LLC.
14880 Sweitzer Lane
Laurel, MD 20707
(888) 497-3233

Disclaimer:

This drawing is the property of Solar Energy World Inc. The information herein contained shall be used for the sole benefit of Solar Energy World. It shall not be disclosed to others outside the recipient's organization, in whole or in part, without the written permission of Solar Energy World, except in connection with the sale and use of the respective Solar Energy equipment.

Building Code
International Residential Code (IRC) 2021

Electrical Code
National Electrical Code (NEC) 2020

Wind Speed	Snow Load
115 MPH	30 PSF

Modules
(9) JA SOLAR JAM54D41-440 MB

Inverter(s)
(9) ENPHASE IQ8MC-72-M-US

DC System Size	AC System Size
3.960 kW	2.880 kW

Customer Information
Thomas Schultz
806 S Fairfax St,
Alexandria, VA, 22314

Partner/Lender
None

AHJ	Utility
Alexandria City	Dominion VA

Sheet Name
Installation Map

Drawn By	Date
TR	June 2, 2026

Scale	Job Number	Sheet
AS NOTED	VA31347	E-4

Electrical Calcultations

1. Conductor sizing per art 690.8 (B) (1)
   a. Conductor must have 30 deg. C. ampacity = 125 percent continuous current per art 215.2(A)(1)
   b. conductor must have (after correction for conditions of use continuous current per table 310.16
   c. Evaluate conductor temperature of terminations per NEC110.14 (C). Ampacity of wire derated for condition of termination must be continuous current*1.25. All string terminations are rated at 90 deg. C.

2. OCP Sizing per art 690.8(B)(1)
   a. round up to next size per art 240.4(B)

3. Conductor sizing per art 690.8 (B) (1)
   a. Conductor must have 30 deg. C ampacity = 125 percent continuous current per art 215.2(A)(1)
   b. conductor must have (after correction for conditions of use) continuous current per table 310.16
   c. Evaluate conductor temperature of terminations per 110.14(C). Ampacity of wire derated for condition of termination must be continuous current*1.25. All branch terminations are rated at 75 deg. C min.

4. OCP Sizing per art 690.8(B)(1)
   a. round up to next size per art 240.4(B)

5. Conductor sizing per art 690.8 (B) (1)
   a. Conductor must have 30 deg. C ampacity = 125 percent continuous current per art 215.2(A)(1)
   b. conductor must have (after correction for conditions of use continuous current per table 310.16
   c. Evaluate conductor temperature of terminations per 110.14(C). Ampacity of wire derated for condition of termination must be continuous current*1.25. All inverter output terminations are rated at 75 deg. C.

6. OCP Sizing
   a. round up to next size per art 240.4(B)

7. Conductor sizing per art 690.8 (B) (1)
   a. Conductor must have 30 deg. C ampacity = 125 percent continuous current per art 215.2(A)(1)
   b. conductor must have (after correction for conditions of use continuous current per table 310.16
   c. Evaluate conductor temperature of terminations per 110.14(C). Ampacity of wire derated for condition of termination must be continuous current*1.25. All inverter output terminations are rated at 75 deg. C min.

Wire Size Calculation Data:

Wire Number 1 - inbuilt wire from PV manufacturer company #10 PV WIRE 2KV RATED.
Wire Number 2 - #10 Cu PV Wire
Wire Number 3 - Pre-Manufactured Cable
Wire Number 3A is Transition Box to Load Center
Max AC Current X # of micro inverters in series X 1.25
= 1.33 x 9 x 1.25 = 14.96A which will be #10 Cu THHN/THWN-2 wire size
Wire Number 4 is Load Center to AC disconnect
Max AC Current X # of micro inverters X 1.25
= 1.33 x 9 x1.25 = 14.96A which will be #10 Cu THHN/THWN-2 wire size
Wire Number 5 is Interconnection Wire which will be #6 Cu THHN/THWN-2 wire size
Wire Number 6 is Bare Copper Wire #8 Cu
Wire Number 7 is Equipment Ground conductor #8 Cu
Wire Number 8 is Grounding electrode conductor (GEC) #6 Cu

SolarEnergyWorld
Because Tomorrow Matters
Solar Energy World LLC.
14880 Sweitzer Lane
Laurel, MD 20707
(888) 497-3233

Disclaimer:
This drawing is the property of Solar Energy World Inc. The information herein contained shall be used for the sole benefit of Solar Energy World. It shall not be disclosed to others outside the recipient's organization, in whole or in part, without the written permission of Solar Energy World, except in connection with the sale and use of the respective Solar Energy equipment.

Building Code: International Residential Code (IRC) 2021
Electrical Code: National Electrical Code (NEC) 2020
Wind Speed: 115 MPH | Snow Load: 30 PSF
Modules: (9) JA SOLAR JAM54D41-440 MB
Inverter(s): (9) ENPHASE IQ8MC-72-M-US
DC System Size: 3.960 kW | AC System Size: 2.880 kW
Customer Information: Thomas Schultz, 806 S Fairfax St, Alexandria, VA, 22314
Partner/Lender: None
AHJ: Alexandria City | Utility: Dominion VA
Sheet Name: Electrical Calculations
Drawn By: TR | Date: June 2, 2026
Scale: AS NOTED | Job Number: VA31347 | Sheet: E-5

JOB LEAD : _____ NEAREST HOSPITAL ADDRESS : _____

_____

Anchor distance from leading edge	Working distance along roof edge (from perpendicular)
6'-0"	8'-0"
10'-0"	9'-9"
15'-0"	11'-7"
20'-0"	13'-3"
25'-0"	14'-6"
30'-0"	16'-0"
35'-0"	17'-2"

KEY

FIRE SAFETY ZONE

LADDER

ROOF ANCHOR

EXCLUSION ZONE

CREW SIGNATURES

_____

_____

_____

_____

_____

_____

_____

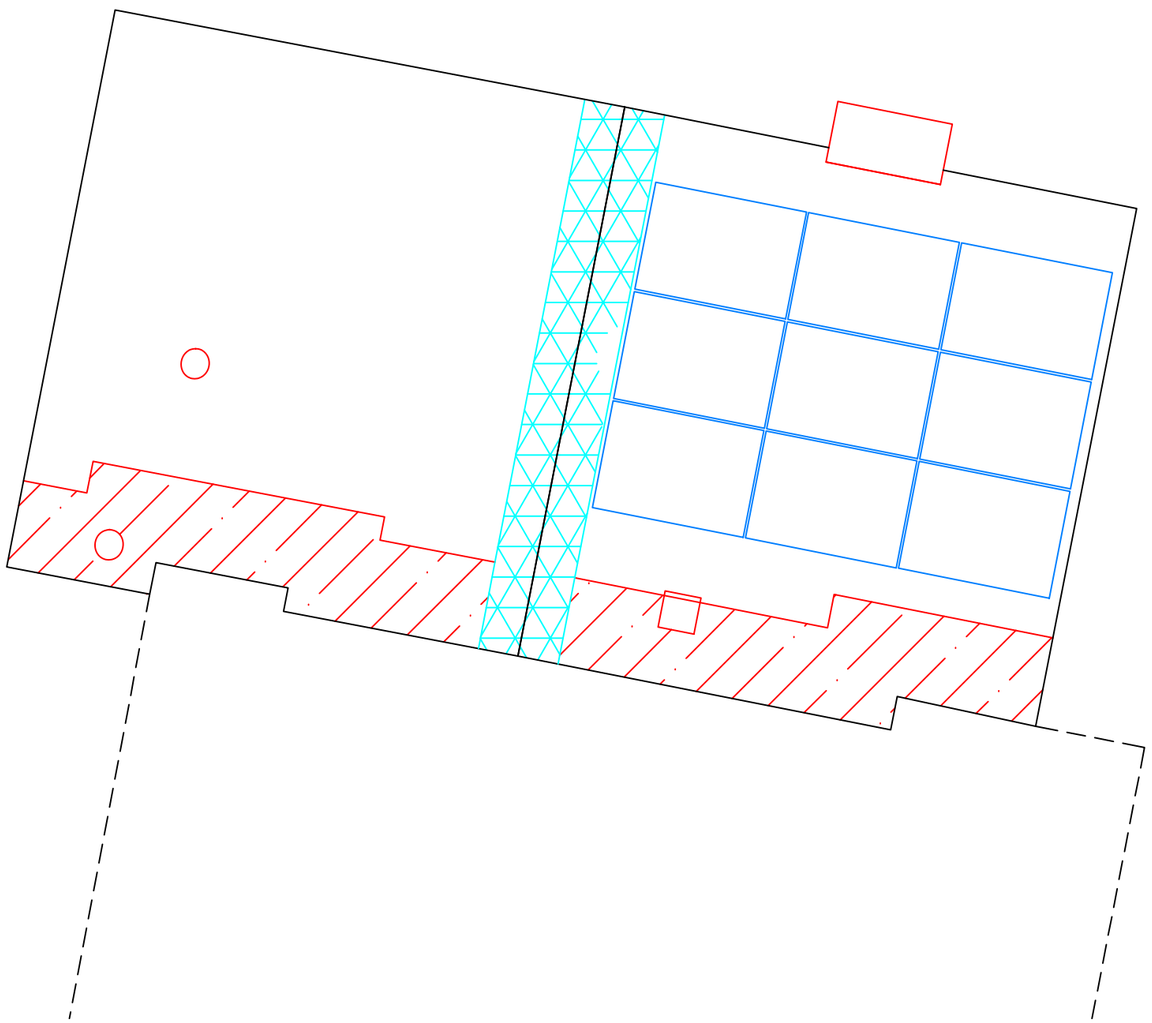

SAFETY PLAN

Please Note Hazards
(overhead powerlines, tree branches, uneven terrain, etc)

SolarEnergyWorld
Because Tomorrow Matters

Solar Energy World LLC.
14880 Sweitzer Lane
Laurel, MD 20707
(888) 497-3233

Disclaimer:
This drawing is the property of Solar Energy World Inc. The information herein contained shall be used for the sole benefit of Solar Energy World. It shall not be disclosed to others outside the recipient's organization, in whole or in part, without the written permission of Solar Energy World, except in connection with the sale and use of the respective Solar Energy equipment.

Building Code: International Residential Code (IRC) 2021

Electrical Code: National Electrical Code (NEC) 2020

Wind Speed: 115 MPH | Snow Load: 30 PSF

Modules: (9) JA SOLAR JAM54D41-440 MB

Inverter(s): (9) ENPHASE IQ8MC-72-M-US

DC System Size: 3.960 kW | AC System Size: 2.880 kW

Customer Information: Thomas Schultz
806 S Fairfax St,
Alexandria, VA, 22314

Partner/Lender: None

AHJ: Alexandria City | Utility: Dominion VA

Sheet Name: Safety Plan

Drawn By: TR | Date: June 2, 2026

Scale: AS NOTED | Job Number: VA31347 | Sheet: JHA

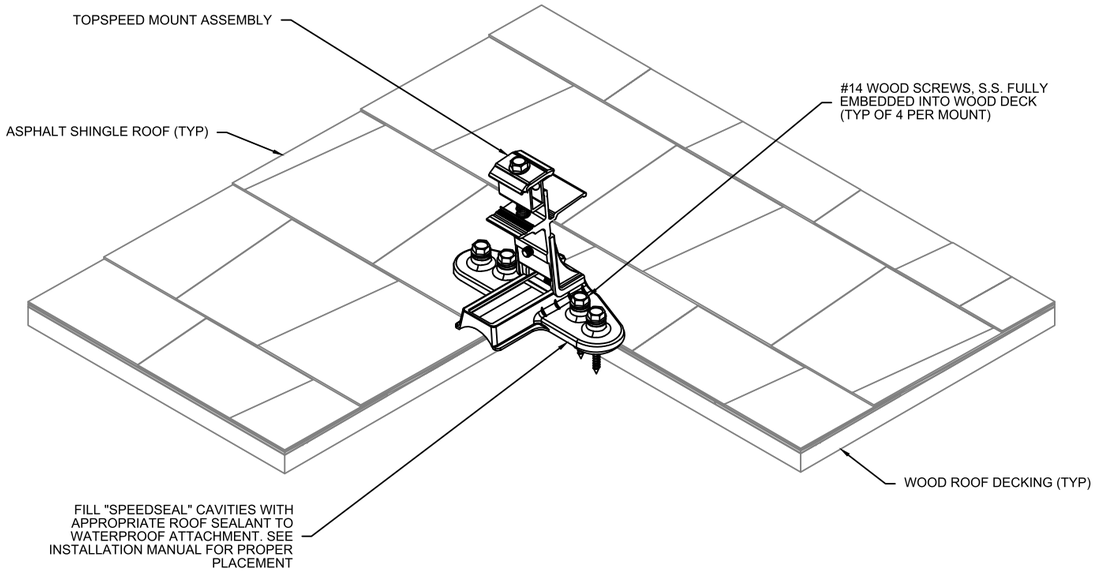

Structural Details		
S1	Rafter	2x8 O.C. 16"

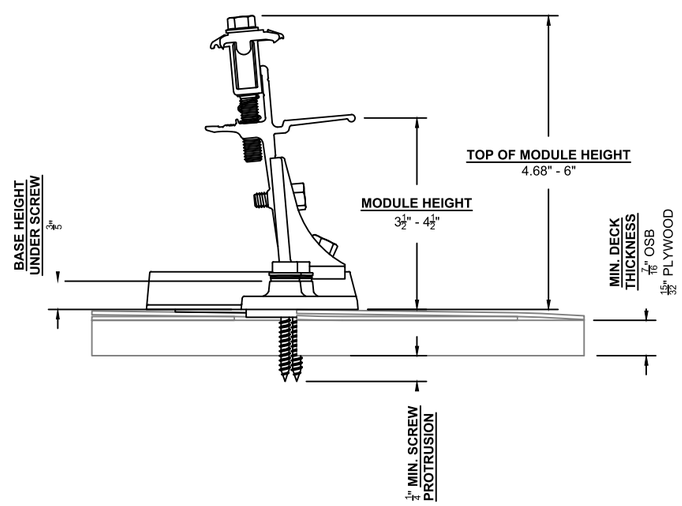

STRUCTURAL ATTACHMENT DETAIL

NOTES:

1. ALL WORK SHALL COMPLY WITH REQUIREMENTS OF INTERNATIONAL RESIDENTIAL CODE (IRC 2021), LOADING CODE (ASCE 7-16), WOOD DESIGN CODE (NDS 2018), AND LOCAL REQUIREMENTS.
2. LOAD CRITERIA PER :
   - EXPOSURE CATEGORY "B"
   - GROUND SNOW LOAD, Pg = 30 PSF
   - LATERAL LOAD RISK CATEGORY "II"
   - ULTIMATE DESIGN WIND SPEED = 115 MPH
3. SOLAR PANELS AND RACKING SYSTEMS SHALL BE INSTALLED PER MANUFACTURER'S RECOMMENDATION.
4. FOLLOW ALL LOCAL AND FEDERAL SAFETY REQUIREMENTS.

COMMONWEALTH OF VIRGINIA
DAVID C. HERNANDEZ
Lic. No. 0402057828
PROFESSIONAL ENGINEER
Exp. 05/31/27
06/03/26

SolarEnergyWorld
Because Tomorrow Matters

Solar Energy World LLC.
14880 Sweitzer Lane
Laurel, MD 20707
(888) 497-3233

Disclaimer:
This drawing is the property of Solar Energy World Inc. The information herein contained shall be used for the sole benefit of Solar Energy World. It shall not be disclosed to others outside the recipient's organization, in whole or in part, without the written permission of Solar Energy World, except in connection with the sale and use of the respective Solar Energy equipment.

Building Code: International Residential Code (IRC) 2021
Electrical Code: National Electrical Code (NEC) 2020
Wind Speed: 115 MPH
Snow Load: 30 PSF
Modules: (9) JA SOLAR JAM54D41-440 MB
Inverter(s): (9) ENPHASE IQ8MC-72-M-US
DC System Size: 3.960 kW
AC System Size: 2.880 kW
Customer Information: Thomas Schultz
806 S Fairfax St,
Alexandria, VA, 22314
Partner/Lender: None
AHJ: Alexandria City
Utility: Dominion VA
Sheet Name: Structural Attachment Details
Drawn By: TR
Date: June 2, 2026
Scale: AS NOTED
Job Number: VA31347
Sheet: S-1

Bill Of Materials		
Product		Count
Module	JA SOLAR JAM54D41-440 MB	9
Inverter	ENPHASE IQ8MC-72-M-US	9
Racking	Mounts Without Spacers	18
	Mounts With Spacers	6
	Clamps Without Spacers	0
	Clamps With Spacers	2

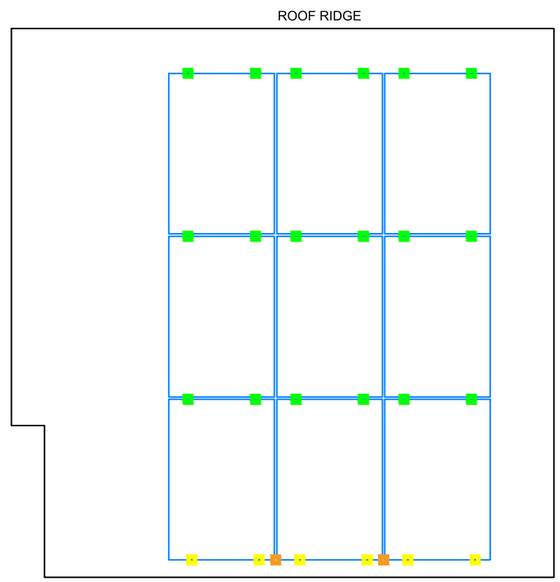

SOLAR PANEL FOOTING PLAN R1

Scale: 3/16" = 1'-0"

KEY

- MOUNTS WITHOUT SPACERS
- MOUNTS WITH SPACERS
- CLAMPS WITHOUT SPACERS
- CLAMPS WITH SPACERS

NOTES:

1. SNAPNRACK TOPSPEED SHALL BE INSTALLED IN ACCORDANCE WITH SNAPNRACK INSTALLATION MANUAL.
2. ADD TOPSPEED CLAMP IF GREATER THAN (SOLAR PANEL LENGTH / 4) FOR LANDSCAPE OR (SOLAR PANEL WIDTH /4) FOR PORTRAIT
3. NO SOLAR PANEL SHALL CANTILEVER MORE THAN 1/4 SOLAR PANEL LENGTH OR WIDTH DEPENDING ON ORIENTATION. UNLESS FOR MANUFACTURER SPECIFIED CLAMPING ZONE

SolarEnergyWorld
Because Tomorrow Matters

Solar Energy World LLC.
14880 Sweitzer Lane
Laurel, MD 20707
(888) 497-3233

Disclaimer:
This drawing is the property of Solar Energy World Inc. The information herein contained shall be used for the sole benefit of Solar Energy World. It shall not be disclosed to others outside the recipient's organization, in whole or in part, without the written permission of Solar Energy World, except in connection with the sale and use of the respective Solar Energy equipment.

Building Code: International Residential Code (IRC) 2021

Electrical Code: National Electrical Code (NEC) 2020

Wind Speed: 115 MPH | Snow Load: 30 PSF

Modules: (9) JA SOLAR JAM54D41-440 MB

Inverter(s): (9) ENPHASE IQ8MC-72-M-US

DC System Size: 3.960 kW | AC System Size: 2.880 kW

Customer Information:
Thomas Schultz
806 S Fairfax St,
Alexandria, VA, 22314

Partner/Lender: None

AHJ: Alexandria City | Utility: Dominion VA

Sheet Name: Solar Panel Footing Plan

Drawn By: TR | Date: June 2, 2026

Scale: AS NOTED | Job Number: VA31347 | Sheet: S-2

ENPHASE.

DATA SHEET

IQ8MC Microinverter

Our newest IQ8 Series Microinverters are the industry's first microgrid-forming*, software-defined microinverters with split-phase power conversion capability to convert DC power to AC power efficiently. The brain of the semiconductor-based microinverter is our proprietary application-specific integrated circuit (ASIC), which enables the microinverter to operate in grid-tied or off-grid modes. This chip is built in advanced 55-nm technology with high-speed digital logic and has superfast response times to changing loads and grid events, alleviating constraints on battery sizing for home energy systems.

Part of the Enphase Energy System, IQ8 Series Microinverters integrate with the IQ Battery, IQ Gateway, and the Enphase App monitoring and analysis software.

Enphase 25 year limited warranty

IQ8 Series Microinverters redefine reliability standards with more than one million cumulative hours of power-on testing, enabling an industry-leading limited warranty of up to 25 years.

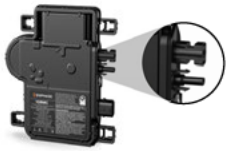

Connect PV modules quickly and easily to the IQ8 Series Microinverters that have integrated MC4 connectors.

UL CERTIFIED SAFETY

IQ8 Series Microinverters are UL Listed as PV rapid shutdown equipment and conforms with various regulations when installed according to the manufacturer's instructions.

*Meets UL 1741 only when installed with IQ System Controller 2 or 3.

Easy to install

- Lightweight and compact with plug-and-play connectors
- Power line communication (PLC) between components
- Faster installation with simple two-wire cabling

High productivity and reliability

- Produces power even when the grid is down*
- More than one million cumulative hours of testing
- Class II double-insulated enclosure
- Optimized for the latest high-powered PV modules

Microgrid-forming

- Complies with the latest advanced grid support
- Remote automatic updates for the latest grid requirements
- Configurable to support a wide range of grid profiles
- Meets CA Rule 21 (UL 1741-SA) and IEEE 1547:2018 (UL 1741-SB)

NOTE:

- IQ8 Microinverters cannot be mixed together with previous generations of Enphase microinverters (IQ7 Series, IQ6 Series, and so on) in the same system.
- IQ Microinverters ship with default settings that meet North America's IEEE 1547 interconnection standard requirements. Region-specific adjustments may be requested by an Authority Having Jurisdiction (AHJ) or utility representative. An IQ Gateway is required to make these changes during installation.

© 2024 Enphase Energy. All rights reserved. Enphase, the e and CC logos, IQ, and certain other marks listed at https://enphase.com/trademark-usage-guidelines are trademarks of Enphase Energy, Inc. in the U.S. and other countries. Data subject to change.

Front of Home

Rear of Home

Right Side of Home

Left Side of Home

Full Scope of Roof

IQ8MC Microinverter

INPUT DATA (DC)	UNITS	IQ8MC-72-M-US
Commonly used module pairings [1]	W	260–460
Module compatibility	—	To meet compatibility, PV modules must be within the following max. input DC voltage and max. module I_{sc}. Module compatibility can be checked at https://enphase.com/installers/microinverters/calculator.
MPPT voltage range	V	25–45
Operating range	V	18–58
Min./Max. start voltage	V	22/58
Max. input DC voltage	V	60
Max. continuous operating DC current	A	14
Max. input DC short-circuit current	A	25
Max. module I_{sc}	A	20
Overvoltage class DC port	—	II
DC port backfeed current	mA	0
PV array configuration	—	Ungrounded array; no additional DC side protection required; AC side protection requires max 20 A per branch circuit

OUTPUT DATA (AC)	UNITS	IQ8MC-72-M-US @240 VAC	IQ8MC-72-M-US @208 VAC
Peak output power	VA	330	315
Max. continuous output power	VA	320	310
Nominal grid voltage (L-L)	V	240, split-phase (L-L), 180°	208, single-phase (L-L), 120°
Min./Max. grid voltage [2]	V	211–264	183–229
Max. continuous output current	A	1.33	1.49
Nominal frequency	Hz	60	
Extended frequency range	Hz	47–68	
AC short circuit fault current over three cycles	Arms	2.70	
Max. units per 20 A (L-L) branch circuit [3]	—	12	10
Total harmonic distortion	%	<5	
Overvoltage class AC port	—	III	
AC port backfeed current	mA	18	
Power factor setting	—	1.0	
Grid-tied power factor (adjustable)	—	0.85 leading … 0.85 lagging	
Peak efficiency	%	97.4	97.2
CEC weighted efficiency	%	97.0	96.5
Nighttime power consumption	mW	33	25

MECHANICAL DATA	UNITS
Ambient temperature range	-40°C to 65°C (-40°F to 149°F)
Relative humidity range	4% to 100% (condensing)
DC connector type	Stäubli MC4
Dimensions (H × W × D); Weight	212 mm (8.3") × 175 mm (6.9") × 30.2 mm (1.2"); 1.1 kg (2.43 lbs)
Cooling	Natural convection – no fans
Approved for wet locations; Pollution degree	Yes; PD3
Enclosure	Class II double-insulated, corrosion-resistant polymeric enclosure
Environ. category; UV exposure rating	NEMA Type 6; outdoor

COMPLIANCE	
Certifications	CA Rule 21 (UL 1741-SA), UL 62109-1, IEEE 1547:2018 (UL 1741-SB), FCC Part 15 Class B, ICES-0003 Class B, CAN/CSA-C22.2 NO. 107.1-01. This product is UL Listed as PV rapid shutdown equipment and conforms with NEC 2014, NEC 2017, NEC 2020, and NEC 2023 section 690.12 and C22.1-2018 Rule 64-218 rapid shutdown of PV systems for AC and DC conductors when installed according to the manufacturer's instructions.

(1) No enforced DC/AC ratio.
(2) Nominal voltage range can be extended beyond nominal if required by the utility.
(3) Limits may vary. Refer to local requirements to define the number of microinverters per branch in your area.

Revision history

REVISION	DATE	DESCRIPTION
DSH-00049-4.0	February 2024	Added information about IEEE 1547 interconnection standard requirements.
DSH-00049-3.0	October 2023	Included NEC 2023 specification in the “Compliance” section.
DSH-00049-2.0	September 2023	Updated module compatibility information.
DSH-00049-1.0	May 2023	Preliminary release.

© 2024 Enphase Energy. All rights reserved. Enphase, the e and CC logos, IQ, and certain other marks listed at https://enphase.com/trademark-usage-guidelines are trademarks of Enphase Energy, Inc. in the U.S. and other countries.
Data subject to change.

JA SOLAR

Harvest the Sunshine

440W

JAM54D41 MB n-type Double Glass Bifacial Modules

Premium Cells

n-Bycium+ 16BB

MBB Half-Cell Technology

26% Up To

Cell Conversion Efficiency

Premium Modules

- Higher power generation better LCOE
- n-type with very Lower LID
- Better Temperature Coefficient
- Better low irradiance response

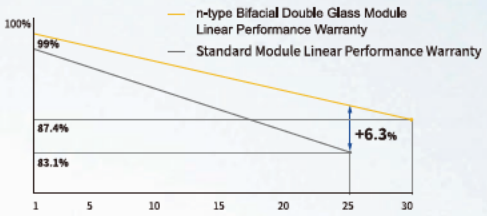

1% 1st-year Degradation

0.4% Annual Degradation Over 30 years

25 25-year product warranty

30 30-year linear power output warranty

Comprehensive Certificates

- IEC 61215, IEC 61730, UL 61215, UL 61730
- ISO 9001: 2015 Quality management systems
- ISO 14001: 2015 Environmental management systems
- ISO 45001: 2018 Occupational health and safety management systems
- IEC 62941: 2019 Terrestrial photovoltaic (PV) modules - Quality system for PV module manufacturing

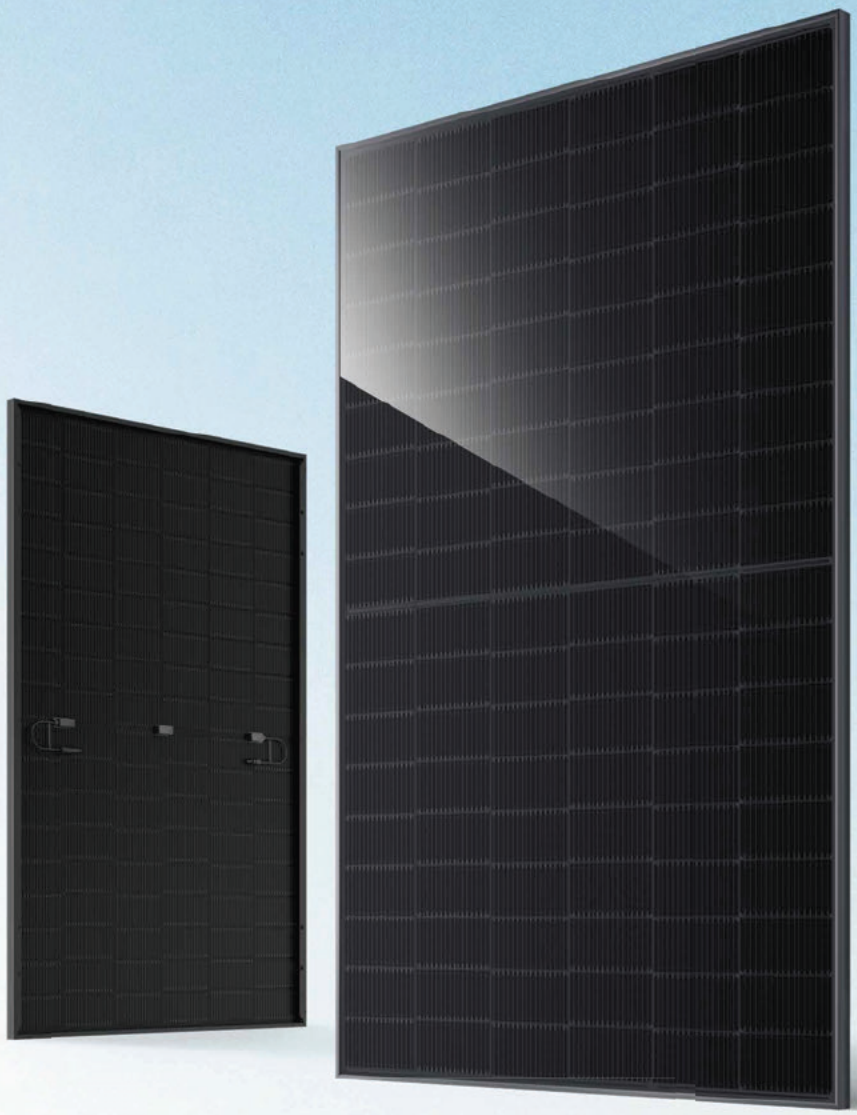

MADE IN USA

DEEP BLUE 4.0 Pro

JAM54D41 MB n-type Double Glass Bifacial Modules

DEEP BLUE 4.0 Pro

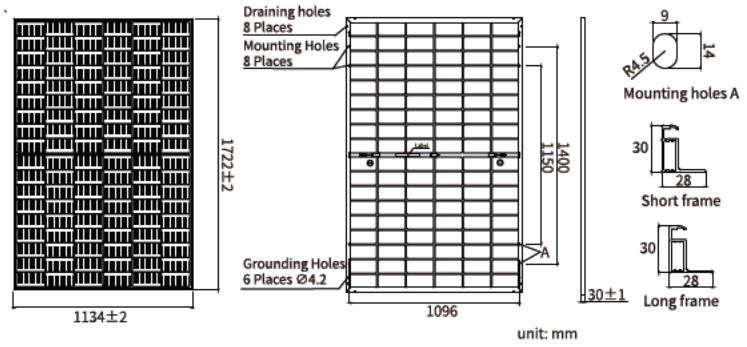

MECHANICAL PARAMETERS

Cell	Mono
Weight	21.5kg
Dimensions	1722±2mm×1134±2mm×30±1mm
Cable Cross Section Size	4mm²(IEC), 12 AWG(UL)
No. of cells	108(6×18)
Junction Box	IP68, 3diodes
Connector	QC 4.10-351/ MC4-EVO2
Cable Length (Including Connector)	Portrait: 300mm(+) /400mm(-) Landscape: 1200mm(+)/1200mm(-)
Front Glass/Back Glass	1.6mm/1.6mm
Packaging Configuration	36pcs/Pallet, 864pcs/40HQ Container

Remark: customized frame color and cable length available upon request

ELECTRICAL PARAMETERS AT STC

TYPE	JAM54D41 -415/MB	JAM54D41 -420/MB	JAM54D41 -425/MB	JAM54D41 -430/MB	JAM54D41 -435/MB	JAM54D41 -440/MB
Rated Maximum Power(Pmax) [W]	415	420	425	430	435	440
Open Circuit Voltage (Voc) [V]	38.00	38.28	38.56	38.84	39.11	39.38
Maximum Power Voltage(Vmp) [V]	32.13	32.38	32.64	32.88	33.13	33.37
Short Circuit Current(Isc) [A]	13.60	13.65	13.70	13.75	13.80	13.85
Maximum Power Current(Imp) [A]	12.92	12.97	13.02	13.08	13.13	13.18
Module Efficiency [%]	21.3	21.5	21.8	22.0	22.3	22.5
Power Tolerance	±2%					
Temperature Coefficient of Isc(α_Isc)	+0.045%/°C					
Temperature Coefficient of Voc (β_Voc)	-0.250%/°C					
Temperature Coefficient of Pmax(γ_Pmp)	-0.290%/°C					
STC	Irradiance 1000W/m², cell temperature 25°C, AM1.5G					

Remark: Electrical data in this catalog do not refer to a single module and they are not part of the offer.
They only serve for comparison among different module types.

CHARACTERISTICS

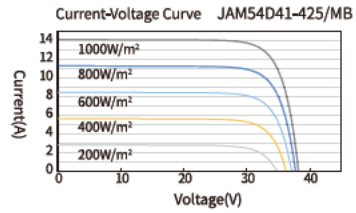

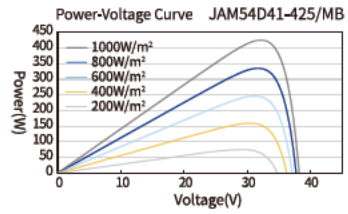

ELECTRICAL CHARACTERISTICS WITH 10% SOLAR IRRADIATION RATIO

TYPE	JAM54D41 -415/MB	JAM54D41 -420/MB	JAM54D41 -425/MB	JAM54D41 -430/MB	JAM54D41 -435/MB	JAM54D41 -440/MB
Rated Max Power(Pmax) [W]	448	454	459	464	470	475
Open Circuit Voltage(Voc) [V]	38.00	38.28	38.56	38.84	39.11	39.38
Max Power Voltage(Vmp) [V]	32.13	32.38	32.64	32.88	33.13	33.37
Short Circuit Current(Isc) [A]	14.69	14.74	14.80	14.85	14.90	14.96
Max Power Current(Imp) [A]	13.95	14.01	14.06	14.12	14.18	14.24
Irradiation Ratio (rear/front)	10%					

OPERATING CONDITIONS

Maximum System Voltage	1500V DC
Operating Temperature	-40°C~+85°C
Maximum Series Fuse Rating	30A
Maximum Static Load, Front	5400Pa(112 lb/ft²)
Maximum Static Load, Back	2400Pa(50 lb/ft²)
NOCT	45±2°C
Bifaciality	80%±5%
Safety Class	Class II
Fire Performance	UL Type 38/Class C

JA SOLAR

Headquarters No. 8 Building, Nuode Center, No.1 Courtyard, East Auto Museum Road, Fengtai District, Beijing
Tel: +86 10 6361 1888 Fax: +86 10 6361 1999
E-mail: sales@jasolar.com marketing@jasolar.com www.jasolar.com

Specifications subject to technical changes and tests.
JA Solar reserves the right of final interpretation.

Version No. : Global-EN-20250417A

DESCRIPTION: SNAPNRACK, TDS, TOPSPEED UNIVERSAL, MOUNT		DOC NUMBER: SNR-DC-01381		SnapNrack®
PART NUMBER(S): 242-02155		DRAWN BY: M.AFFENTRANGER		SNR SOLAR LLC 775 FIERO LANE, SUITE 200 SAN LUIS OBISPO, CA 93401 USA EMAIL: CONTACT@SNAPNRACK.COM
UNITS: IN, LB, DEG [MM, KG, DEG]	SHEET: 1:2	REV: C	DATE: 11/22/2024	THE INFORMATION IN THIS DRAWING IS CONFIDENTIAL AND PROPRIETARY. ANY REPRODUCTION, DISCLOSURE, OR USE THEREOF IS PROHIBITED WITHOUT THE WRITTEN CONSENT OF SUNRUN SOUTH LLC.

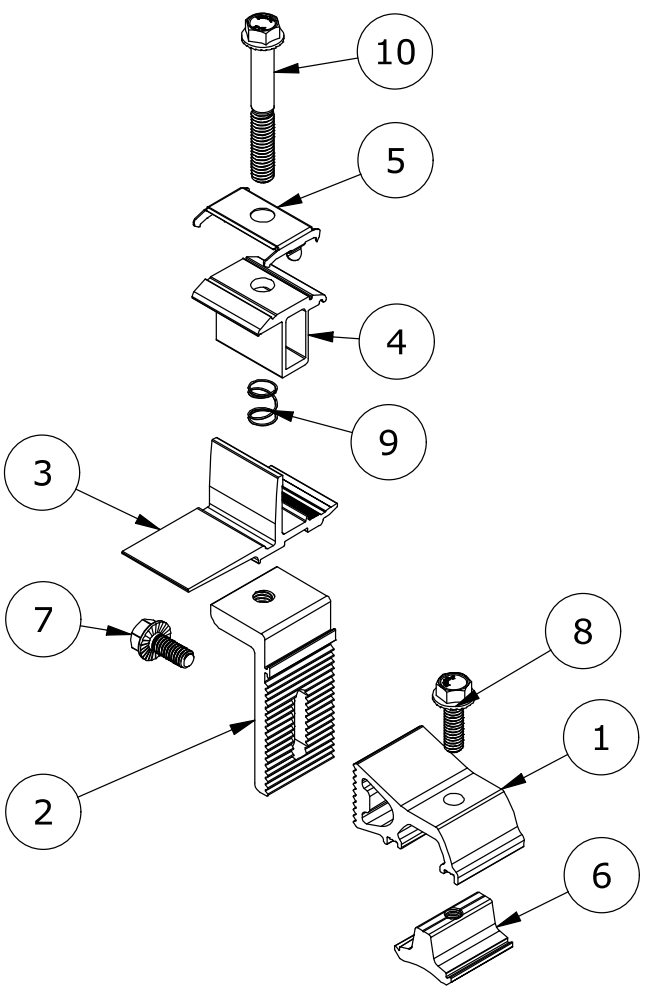

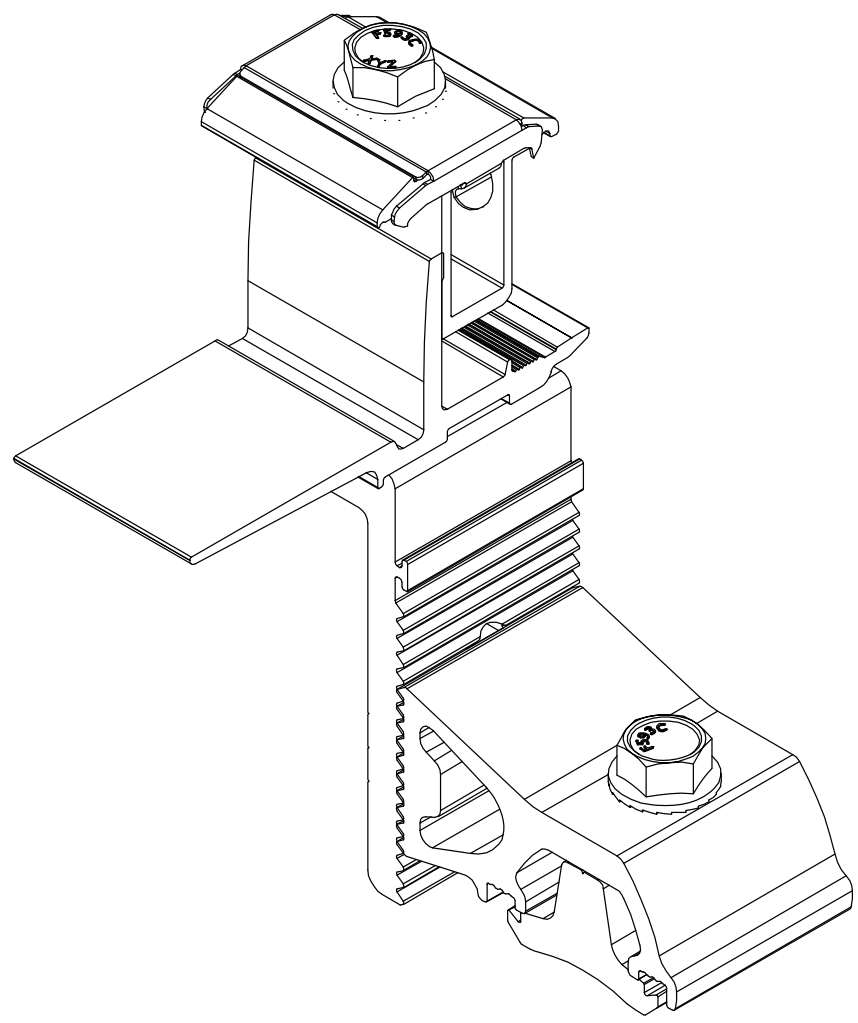

PARTS LIST		
ITEM	QTY	DESCRIPTION
1	1	SNAPNRACK, TOPSPEED UNIVERSAL, RISER, MILL
2	1	SNAPNRACK, TOPSPEED UNIVERSAL, LEVELER, MILL
3	1	SNAPNRACK, TOPSPEED UNIVERSAL, MOUNT BOTTOM, MILL
4	1	SNAPNRACK, TOPSPEED UNIVERSAL, MOUNT TOP, BLACK
5	1	SNAPNRACK, TOPSPEED UNIVERSAL, BONDING CLIP
6	1	SNAPNRACK, DROP IN/ROCK IN CHANNEL NUT
7	1	BOLT, FLANGE, 5/16IN-18 X 3/4IN, CLEAR, SS
8	1	BOLT, FLANGE, SERRATED, 5/16IN-18 X 1IN, SS
9	1	SNAPNRACK, TOPSPEED UNIVERSAL, MOUNT SPRING, SS
10	1	BOLT, FLANGE, SERRATED, 3/8IN-16 X 2-3/4IN, 1/2IN TRIM HEAD, 1.2IN THREAD, BLACK, SS

MATERIALS:	6000 SERIES ALUMINUM, STAINLESS STEEL
DESIGN LOAD (LBS):	623 UP, 674 DOWN, 505 SIDE
ULTIMATE LOAD (LBS):	N/A
TORQUE SPECIFICATION:	12 FT-LBS
CERTIFICATION:	UL 2703, FILE E359313
WEIGHT (LBS):	0.73