ISSUE: Permit to Demolish/Capsulate (partial) and Certificate of Appropriateness for alterations

APPLICANT: Marks-Woods Construction Services

LOCATION: Old and Historic Alexandria District
118 South Fayette Street

ZONE: CL/Commercial Low Zone

STAFF RECOMMENDATION

Staff recommends approval of the Permit to demolish/Capsulate (partial) and Certificate of Appropriateness for alterations as submitted.

GENERAL NOTES TO THE APPLICANT

1. APPEAL OF DECISION: In accordance with the Zoning Ordinance, if the Board of Architectural Review denies or approves an application in whole or in part, the applicant or opponent may appeal the Board's decision to City Council on or before 14 days after the decision of the Board.

2. COMPLIANCE WITH BAR POLICIES: All materials must comply with the BAR's adopted policies unless otherwise specifically approved.

3. BUILDING PERMITS: Most projects approved by the Board of Architectural Review require the issuance of one or more construction permits by Department of Code Administration (including signs). The applicant is responsible for obtaining all necessary construction permits after receiving Board of Architectural Review approval. Contact Code Administration, Permit Center, 4850 Mark Center Drive, Suite 2015, 703-746-4200 for further information.

4. ISSUANCE OF CERTIFICATES OF APPROPRIATENESS AND PERMITS TO DEMOLISH: Applicants must obtain a copy of the Certificate of Appropriateness or Permit to Demolish PRIOR to applying for a building permit. Contact BAR Staff, Room 2100, City Hall, 703-746-3833, or preservation@alexandriava.gov for further information.

5. EXPIRATION OF APPROVALS NOTE: In accordance with Sections 10-106(B), 10-206(B) and 10-307 of the Zoning Ordinance, any Board of Architectural Review approval will expire 12 months from the date of issuance if the work is not commenced and diligently and substantially pursued by the end of that 12-month period.

6. HISTORIC PROPERTY TAX CREDITS: Applicants performing extensive, certified rehabilitations of historic properties may separately be eligible for state and/or federal tax credits. Consult with the Virginia Department of Historic Resources (VDHR) prior to initiating any work to determine whether the proposed project may qualify for such credits.

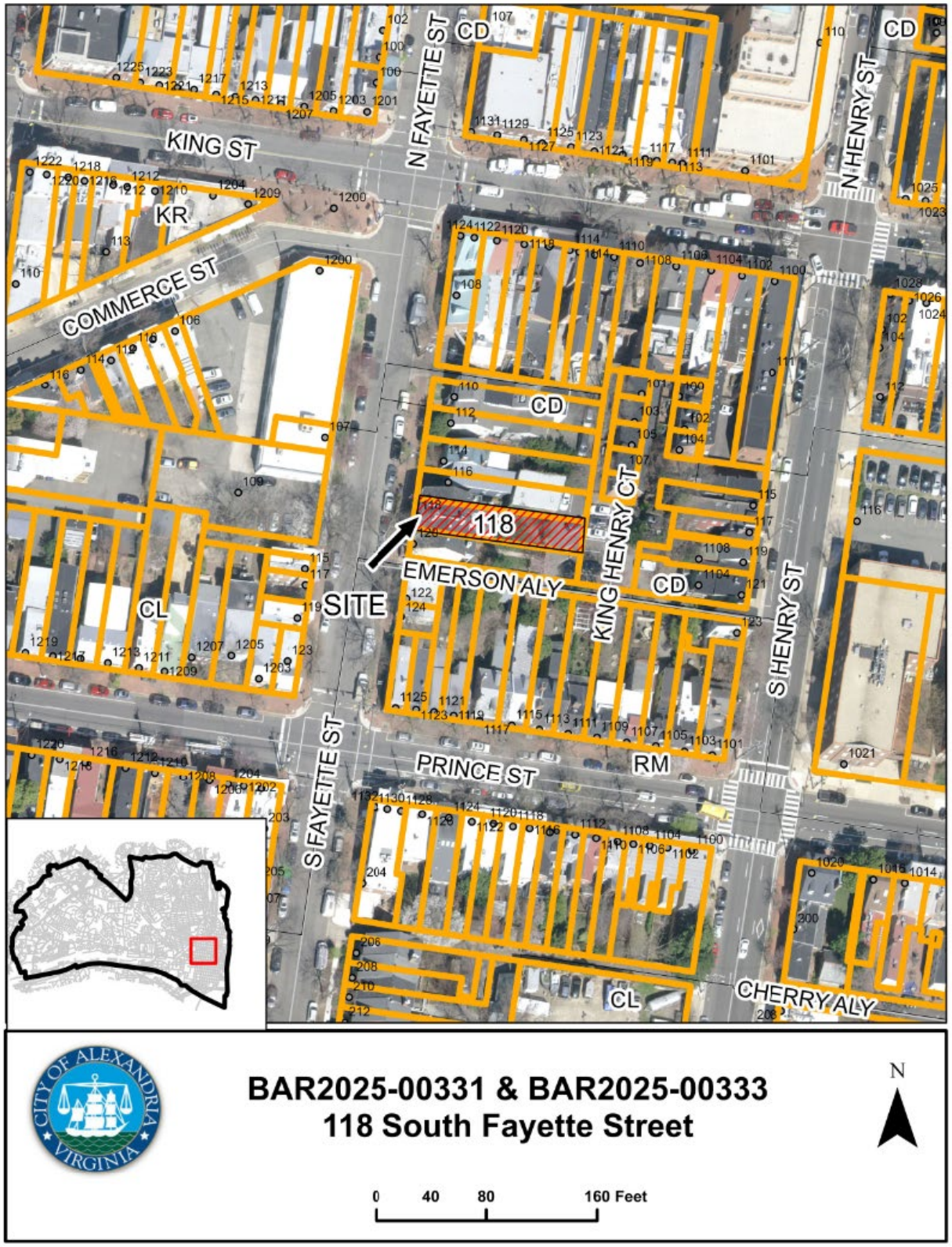
KING ST
N FAYETTE ST
N HENRY ST
COMMERCE ST
KR
CD
118
SITE
EMERSON ALY
KING HENRY CT
S HENRY ST
CL
PRINCE ST
RM
S FAYETTE ST
CHERRY ALY
BAR2025-00331 & BAR2025-00333
118 South Fayette Street
N
0 40 80 160 Feet

Note: Staff coupled the applications for a Permit to Demolish (BAR #2025-00333) and Certificate of Appropriateness (BAR #2025-00331) for clarity and brevity. The Permit to Demolish requires a roll call vote.

I. APPLICANT'S PROPOSAL

Permit to Demolish/Capsulate

The applicant proposes to infill 32.5 square feet of the rear/east elevation to replace two existing French doors, one on each side of the rear elevation with casement windows (Figure 1).

Figure 1 - Proposed work

Certificate of Appropriateness

The applicant proposes to replace two existing pairs of French doors (Figure 2), one on each side of the rear/east elevation with wood, SDL, Marvin Ultimate Casement windows with colonial grid. Also, to replace the existing transom windows with Marvin Ultimate SDL, wood fixed windows with colonial grid, and central pair of French doors with Marvin Ultimate matching the existing. The bottom portion of the proposed windows will be filled and cladded with Hardie siding painted to match the trim.

Figure 2 - Existing conditions

Site context

The subject property sits on the east side of South Fayette Street 100 Block. There is a public alley running on the south side of 120 South Fayette Street, the subject property's neighbor to the south. The rear/east elevation of the property is partially visible from the public alley (Figure 3).

Figure 3 - Rear/east elevation view

II. HISTORY

118 South Fayette Street is a semi-detached two story, gable roofed stucco finished building constructed in **1976**. A one-story addition was built at the rear/east elevation in 2001 (permit # BLD2001-03264).

Previous BAR Approvals

BAR2001-00158 & BAR2001-00157 – additions at the rear on July 18, 2001.

III. ANALYSIS

Permit to Demolish/Capsulate

In considering a Permit to Demolish/Capsulate, the Board must consider the following criteria set forth in the Zoning Ordinance, §10-105(B), which relate only to the subject property and not to neighboring properties. The Board has purview of the proposed demolition/capsulation regardless of visibility.

Standard	Description of Standard	Standard Met?
(1)	Is the building or structure of such architectural or historical interest that its moving, removing, capsulating or razing would be to the detriment of the public interest?	No
(2)	Is the building or structure of such interest that it could be made into a historic shrine?	No
(3)	Is the building or structure of such old and unusual or uncommon design, texture and material that it could not be reproduced or be reproduced only with great difficulty?	No
(4)	Would retention of the building or structure help preserve the memorial character of the George Washington Memorial Parkway?	N/A
(5)	Would retention of the building or structure help preserve and protect an historic place or area of historic interest in the city?	No
(6)	Would retention of the building or structure promote the general welfare by maintaining and increasing real estate values, generating business, creating new positions, attracting tourists, students, writers, historians, artists and artisans, attracting new residents, encouraging study and interest in American history, stimulating interest and study in architecture and design, educating citizens in American culture and heritage, and making the city a more attractive and desirable place in which to live?	No

The analysis of the standards indicated above relates only to the portions of the areas proposed for demolition/capsulation at the rear/east elevation of the 2001 addition. In the opinion of staff, none of the criteria for demolition and capsulation are met and the Permit to Demolish/Capsulate should be granted. The proposed scope to infill the bottom portion (32.5 SF) of the existing doors' opening is limited to the rear/east elevation of the 2001 addition which is barely visible from the public alley running south of the neighbor building. See Figure 3. Staff therefore recommends approval of the Permit to Demolish/Capsulate.

Certificate of Appropriateness

The *Design Guidelines* state that "Windows are a principal character-defining feature of a building, serving both functional and aesthetic purposes." The applicant's proposal to replace two existing pairs of French doors, one on each side of the rear/east elevation with casement windows and transom and the middle French doors in-kind will not affect the historic integrity of the main building and will be minimally visible from the public alley running south of the adjacent property. Therefore, staff recommends approval of the project as submitted.

STAFF
Marina Novaes, Historic Preservation Planner, Planning & Zoning
Tony LaColla, AICP, Land Use Services Division Chief, Planning & Zoning

IV. CITY DEPARTMENT COMMENTS

Legend: C- code requirement R- recommendation S- suggestion F- finding

Zoning
C-1 Proposed window replacement, door replacement and infill of existing doors will comply with zoning.

Code Administration
C-1 A building permit is required.

Transportation and Environmental Services
R-1 The building permit must be approved and issued prior to the issuance of any permit for demolition, if a separate demolition permit is required. (T&ES)

R-2 Applicant shall be responsible for repairs to the adjacent city right-of-way if damaged during construction activity. (T&ES)

R-3 No permanent structure may be constructed over any existing private and/or public utility easements. It is the responsibility of the applicant to identify any and all existing easements on the plan. (T&ES)

F-1 After review of the information provided, an approved grading plan is not required at this time. Please note that if any changes are made to the plan it is suggested that T&ES be included in the review. (T&ES)

C-1 The applicant shall comply with the City of Alexandria's Solid Waste Control, Title 5, Chapter 1, which sets forth the requirements for the recycling of materials (Sec. 5-1-99). (T&ES)

C-2 The applicant shall comply with the City of Alexandria's Noise Control Code, Title 11, Chapter 5, which sets the maximum permissible noise level as measured at the property line. (T&ES)

C-3 Roof, surface and sub-surface drains be connected to the public storm sewer system, if available, by continuous underground pipe. Where storm sewer is not available applicant must provide a design to mitigate impact of stormwater drainage onto adjacent properties and to the satisfaction of the Director of Transportation & Environmental Services. (Sec.5-6-224) (T&ES)

C-4 All secondary utilities serving this site shall be placed underground. (Sec. 5-3-3) (T&ES)

C-5 Any work within the right-of-way requires a separate permit from T&ES. (Sec. 5-2) (T&ES)

C-6 All improvements to the city right-of-way such as curbing, sidewalk, driveway aprons, etc. must be city standard design. (Sec. 5-2-1) (T&ES)

Alexandria Archaeology

F-1 No archaeology comments

V. ATTACHMENTS

- Application Materials
- Completed application
- Plans
- Material specifications
- Scaled survey plat if applicable
- Photographs
- Public comment, if applicable
- Any other supporting documentation

BAR CASE# BAR2025-00331 & BAR2025-00333
(OFFICE USE ONLY)

ADDRESS OF PROJECT: 118 S Fayette St

DISTRICT: ☒ **Old & Historic Alexandria** ☐ **Parker – Gray** ☐ **100 Year Old Building**

TAX MAP AND PARCEL: 074.01-04-34 **ZONING:** CL

APPLICATION FOR: *(Please check all that apply)*

☒ CERTIFICATE OF APPROPRIATENESS

☒ PERMIT TO MOVE, REMOVE, ENCAPSULATE OR DEMOLISH
(Required if more than 25 square feet of a structure is to be demolished/impacted)

☐ WAIVER OF VISION CLEARANCE REQUIREMENT and/or YARD REQUIREMENTS IN A VISION CLEARANCE AREA (Section 7-802, Alexandria 1992 Zoning Ordinance)

☐ WAIVER OF ROOFTOP HVAC SCREENING REQUIREMENT
(Section 6-403(B)(3), Alexandria 1992 Zoning Ordinance)

Applicant: ☐ Property Owner ☒ Business *(Please provide business name & contact person)*

Name: Marks-Woods Construction Services

Address: [redacted]

City: [redacted] State: VA Zip: [redacted]

Phone: [redacted] E-mail : [redacted]

Authorized Agent *(if applicable)*: ☐ Attorney ☒ Architect ☐ _____

Name: Cody Stadler (stadlerdesign, LLC) Phone: [redacted]

E-mail: [redacted]

Legal Property Owner:

Name: Ky DeThomas

Address: [redacted]

City: [redacted] State: [redacted] Zip: [redacted]

Phone: [redacted] E-mail: [redacted]

BAR CASE# BAR2025-00331 & BAR2025-00333
(OFFICE USE ONLY)

NATURE OF PROPOSED WORK: *Please check all that apply*

☐ NEW CONSTRUCTION
☐ EXTERIOR ALTERATION: *Please check all that apply.*

☐ awning	☐ fence, gate or garden wall	☐ HVAC equipment	☐ shutters
■ doors	■ windows	■ siding	☐ shed
☐ lighting	☐ pergola/trellis	☐ painting unpainted masonry	
☐ other _____			

☐ ADDITION
☐ DEMOLITION/ENCAPSULATION
☐ SIGNAGE

DESCRIPTION OF PROPOSED WORK: *Please describe the proposed work in detail (Additional pages may be attached).*

Replacement of two rear doors with windows and infilling of area under new window sill. Replacement in-kind of center rear door and all three transom windows.

SUBMITTAL REQUIREMENTS:

☐ Check this box if there is a homeowner's association for this property. If so, you must attach a copy of the letter approving the project.

Items listed below comprise the **minimum supporting materials** for BAR applications. Staff may request additional information during application review. Please refer to the relevant section of the *Design Guidelines* for further information on appropriate treatments.

Applicants must use the checklist below to ensure the application is complete. Include all information and material that are necessary to thoroughly describe the project. Incomplete applications will delay the docketing of the application for review. Pre-application meetings are required for all proposed additions. All applicants are encouraged to meet with staff prior to submission of a completed application.

Demolition/Encapsulation : *All applicants requesting 25 square feet or more of demolition/encapsulation must complete this section. Check N/A if an item in this section does not apply to your project.*

N/A
☐ ■ Survey plat showing the extent of the proposed demolition/encapsulation.
☐ ■ Existing elevation drawings clearly showing all elements proposed for demolition/encapsulation.
☐ ■ Clear and labeled photographs of all elevations of the building if the entire structure is proposed to be demolished.
☐ ■ Description of the reason for demolition/encapsulation.
☐ ■ Description of the alternatives to demolition/encapsulation and why such alternatives are not considered feasible.

BAR CASE# BAR2025-00331 & BAR2025-00333
(OFFICE USE ONLY)

Additions & New Construction: *Drawings must be to scale and should not exceed 11" x 17" unless approved by staff. Check N/A if an item in this section does not apply to your project.*

	N/A	
☐	■	Scaled survey plat showing dimensions of lot and location of existing building and other structures on the lot, location of proposed structure or addition, dimensions of existing structure(s), proposed addition or new construction, and all exterior, ground and roof mounted equipment.
☐	■	FAR & Open Space calculation form.
☐	■	Clear and labeled photographs of the site, surrounding properties and existing structures, if applicable.
☐	■	Existing elevations must be scaled and include dimensions.
☐	■	Proposed elevations must be scaled and include dimensions. Include the relationship to adjacent structures in plan and elevations.
☐	■	Materials and colors to be used must be specified and delineated on the drawings. Actual samples may be provided or required.
☐	■	Manufacturer's specifications for materials to include, but not limited to: roofing, siding, windows, doors, lighting, fencing, HVAC equipment and walls.
☐	■	For development site plan projects, a model showing mass relationships to adjacent properties and structures.

Signs & Awnings: *One sign per building under one square foot does not require BAR approval unless illuminated. All other signs including window signs require BAR approval. Check N/A if an item in this section does not apply to your project.*

	N/A	
☐	■	Linear feet of building: Front:_____Secondary front (if corner lot):_____.
☐	■	Square feet of existing signs to remain:_____.
☐	■	Photograph of building showing existing conditions.
☐	■	Dimensioned drawings of proposed sign identifying materials, color, lettering style and text.
☐	■	Location of sign (show exact location on building including the height above sidewalk).
☐	☐	Means of attachment (drawing or manufacturer's cut sheet of bracket if applicable).
☐	■	Description of lighting (if applicable). Include manufacturer's cut sheet for any new lighting fixtures and information detailing how it will be attached to the building's facade.

Alterations: *Check N/A if an item in this section does not apply to your project.*

	N/A	
☒	☐	Clear and labeled photographs of the site, especially the area being impacted by the alterations, all sides of the building and any pertinent details.
☒	☐	Manufacturer's specifications for materials to include, but not limited to: roofing, siding, windows, doors, lighting, fencing, HVAC equipment and walls.
☒	☐	Drawings accurately representing the changes to the proposed structure, including materials and overall dimensions. Drawings must be to scale.
☒	☐	An official survey plat showing the proposed locations of HVAC units, fences, and sheds.
☐	■	Historic elevations or photographs should accompany any request to return a structure to an earlier appearance.

BAR CASE# BAR2025-00331 & BAR2025-00333
(OFFICE USE ONLY)

ALL APPLICATIONS: *Please read and check that you have read and understand the following items:*

- [x] I understand that after reviewing the proposed alterations, BAR staff will invoice the appropriate filing fee in APEX. The application will not be processed until the fee is paid online.
- [x] I understand the notice requirements and will return a copy of the three respective notice forms to BAR staff at least five days prior to the hearing. If I am unsure to whom I should send notice I will contact Planning and Zoning staff for assistance in identifying adjacent parcels.
- [x] I, the applicant, or an authorized representative will be present at the public hearing.
- [x] I understand that any revisions to this initial application submission (including applications deferred for restudy) must be accompanied by the BAR Supplemental form and revised materials.

The undersigned hereby attests that all of the information herein provided including the site plan, building elevations, prospective drawings of the project, and written descriptive information are true, correct and accurate. The undersigned further understands that, should such information be found incorrect, any action taken by the Board based on such information may be invalidated. The undersigned also hereby grants the City of Alexandria permission to post placard notice as required by Article XI, Division A, Section 11-301(B) of the 1992 Alexandria City Zoning Ordinance, on the property which is the subject of this application. The undersigned also hereby authorizes the City staff and members of the BAR to inspect this site as necessary in the course of research and evaluating the application. The applicant, if other than the property owner, also attests that he/she has obtained permission from the property owner to make this application.

APPLICANT OR AUTHORIZED AGENT:

Signature: _____

Printed Name: Cody Stadler

Date: 08/15/2025

OWNERSHIP AND DISCLOSURE STATEMENT
Use additional sheets if necessary

1. Applicant. State the name, address and percent of ownership of any person or entity owning an interest in the applicant, unless the entity is a corporation or partnership, in which case identify each owner of more than three percent. The term ownership interest shall include any legal or equitable interest held at the time of the application in the real property which is the subject of the application.

Name	Address	Percent of Ownership
1. Kyle and Courtney DeTho	[redacted]	100%
2.		
3.		

2. Property. State the name, address and percent of ownership of any person or entity owning an interest in the property located at 118 S. Fayette Street (address), unless the entity is a corporation or partnership, in which case identify each owner of more than three percent. The term ownership interest shall include any legal or equitable interest held at the time of the application in the real property which is the subject of the application.

Name	Address	Percent of Ownership
1. Kyle and Courtney DeTho	[redacted]	100%
2.		
3.		

3. Business or Financial Relationships. Each person or entity listed above (1 and 2), with an ownership interest in the applicant or in the subject property is required to disclose **any** business or financial relationship, as defined by Section 11-350 of the Zoning Ordinance, existing at the time of this application, or within the 12-month period prior to the submission of this application with any member of the Alexandria City Council, Planning Commission, Board of Zoning Appeals or either Boards of Architectural Review.

Name of person or entity	Relationship as defined by Section 11-350 of the Zoning Ordinance	Member of the Approving Body (i.e. City Council, Planning Commission, etc.)
1. N/A		
2. N/A		
3. N/A		

NOTE: Business or financial relationships of the type described in Sec. 11-350 that arise after the filing of this application and before each public hearing must be disclosed prior to the public hearings.

As the applicant or the applicant's authorized agent, I hereby attest to the best of my ability that the information provided above is true and correct.

August 15, 2025	Kyle A. DeThomas	Kyle A. DeThomas
Date	Printed Name	Signature

DeThomas Residence
118 S Fayette St
Alexandria, VA 22314

stadlerdesign
architecture | interiors
2000 Duke St | 3rd Floor
Alexandria, VA 22314

DeThomas

118 S Fayette St
Alexandria, VA 22314

Consultants:

Issued For:

No.:	Description:	Date:
1	ISSUE FOR PERMIT	XX/XX/2025

Key Plan:

Seal & Signature:

Sheet Name:

COVER AND DRAWING INDEX

Project No.: 19001

Sheet No.: G-000

Scale:

8/14/2025 2:18:10 PM

COPYRIGHT 2025

SHEET INDEX

GENERAL SHEET INDEX

NUMBER	NAME	ISSUANCE
G-001	PROJECT INFORMATION	
G-000	COVER AND DRAWING INDEX	ISSUE FOR PERMIT

ARCHITECTURAL SHEET INDEX

NUMBER	NAME	ISSUANCE
AX-100	BASEMENT - EXISTING	ISSUE FOR PERMIT
AX-101	FIRST FLOOR - EXISTING	ISSUE FOR PERMIT
AX-102	SECOND FLOOR - EXISTING	ISSUE FOR PERMIT
AX-103	ROOF - EXISTING	ISSUE FOR PERMIT
AD-101	FIRST FLOOR - DEMO	ISSUE FOR PERMIT
A-101	FIRST FLOOR	ISSUE FOR PERMIT
A-201	FIRST FLOOR RCP	ISSUE FOR PERMIT
A-400	BUILDING ELEVATIONS	ISSUE FOR PERMIT

STRUCTURAL SHEET INDEX

NUMBER	NAME	ISSUANCE

PLUMBING SHEET INDEX

NUMBER	NAME	ISSUANCE

GENERAL NOTES

1. General Conditions of the Contract (AIA Document A-201) apply to this project.

2. All work shall comply with State and local Building Codes, fire department regulations, utility company standards, and the best trade practices.

3. The General Contractor shall arrange all inspections and tests as specified or required by the building department and shall pay all costs and fees for same. The Contractor shall secure all building permits and upon completion of the project (prior to final payment) deliver to the Owner a Certificate of Occupancy or Use from the building department.

4. All plumbing and electrical work shall be performed by State licensed contractors. Contractors shall submit all required permits, certificates, and sign-offs to Owner and Architect for their records.

5. The General Contractor shall verify all dimensions, be familiar with the existing conditions, and bring any discrepancies to the attention of the Architect prior to submission of construction proposal and before beginning work. The Drawings reflect conditions reasonably inferred from the existing visible conditions but cannot guaranteed by the Architect. Drawings may be scaled for estimating purposes and for general reference only. For all other dimensions or locations consult the Architect or refer to dimensions on Drawings. Verify all dimensions in the field.

6. The General Contractor shall lay out all work and be responsible for all dimensions and conditions for trades such as electrical, plumbing, etc.

7. The General Contractor shall provide and maintain access to the premises at all times.

8. The Construction Manager shall make the premises secure from the elements and trespass on a daily basis.

9. The General Contractor shall keep the construction site free and clear of all debris and keep out all unauthorized persons. Upon completion of Work, the entire construction area is to be thoroughly cleaned and prepared for occupancy by Owner. All materials and debris resulting from the Contractor's work shall be removed from the site and disposed of properly. Care shall be taken during construction that no debris or materials are deposited in any Right of Way area.

10. The General Contractor shall be responsible for protecting all existing and new conditions and materials on the site. Any damage caused by or during the execution of the Work is the Contractor's responsibility and shall be repaired to the Owner's satisfaction at the Contractor's expense.

11. No cutting or damage to building structural components will be allowed without written authorization from the Architect.

12. All utilities shall be connected to provide gas, electric, and water to all equipment whether said equipment is in Contract or not. Equipment shall be guaranteed to function properly upon completion.

13. Manufacturer's standard specifications and materials approved for project use are hereby made part of these Notes with same force and effect as if written out in full herein. All appliances, fixtures, equipment, hardware, etc. shall be installed in accordance with Manufacturer's specifications and procedures.

14. Written words take precedence over drawn lines. Large-scale details and plans take precedence over smaller details and plans. Should a conflict arrive between the Specifications and Drawings, the requirements deemed most stringent shall be used.

15. Minor details not usually shown or specified but necessary for proper and acceptable construction, installation, or operation of any part of the Work as determined by the Architect shall be included in the Work as if it were specified or indicated on the Drawings.

16. All architectural drawings and construction notes are complimentary. What is indicated and called for by one shall be binding as though called for by all.

17. No deviation from the Drawings or Specifications or intent of same shall be made without the Architect's written authorization.

18. All Work shall be guaranteed for one year after final approval. The General Contractor shall sign the written guarantee as provided by the Owner. The guarantee shall cover all general and subcontractor work. All defects discovered during this period shall be repaired to the Owner's satisfaction at the Contractor's expense.

19. All dimensions are to face of stud or centerline of structure unless otherwise noted (UON).

20. Door and window details are indicated on the Door and Window Schedules.

21. Door and window dimensions are to centerlines of units UNO.

LEGEND

- A — Wall Type (see wall type schedule)
- 101B — Door Type (see door schedule)
- W1 — Window Type (see window schedule)
- 1 / A101 — Building Section
- 1 / A101 — Wall Section
- 1 / A101 — Detail Number
- 1 / A101 — Building Elevation
- 1 / A101 — Interior Elevation
- + / 2'-0" — Elevation Mark
- ROOM / 101 — Room Name / Number
- A — Column Line
- ℄ — Centerline
- 3 — Revision Tag

A.C.I.	AMERICAN CONCRETE INSTITUTE
BLDG.	BUILDING
CONC.	CONCRETE
C.J.	CONTROL JOINT
COL.	COLUMN
DET.	DETAIL
DIA.	DIAMETER
DN.	DOWN
EL/ELEV.	ELEVATION
ELEC.	ELECTRICAL
EQ.	EQUAL
FIN.	FINISH
FLR.	FLOOR
GALV.	GALVANIZED
GYP.	GYPSUM
I.D.	INSIDE DIAMETER
JT.	JOINT
MECH.	MECHANICAL
MIN.	MINIMUM
N.T.S.	NOT TO SCALE
NO.	NUMBER
O.C.	ON CENTER
OPG.	OPENING
O.D	OUTSIDE DIAMETER
U.N.O.	UNLESS NOTED OTHERWISE
REF.	REFERENCE
R.	RISER
R.O.	ROUGH OPENING
RM.	ROOM
S/STL.	STAINLESS STEEL
STRUCT.	STRUCTURAL
SPEC.	SPECIFICATIONS
T.O.	TOP OF (...)
T.O.CONC	TOP OF CONCRETE
.	TOP OF FRAMING
T.O.F.	TOP OF STEEL
T.O.STL.	TOP OF WALL
T.O.W.	TREAD
T.	TYPICAL
TYP.	AT
@	AND
+	BOARD
BD.	ABOVE FINISHED FLOOR
A.F.F.	UNLESS OTHERWISE NOTED
U.N.O.	VERIFY IN FIELD
V.I.F	

BUILDING CODE

BUILDING CODE REFERENCES
2018 VIRGINIA RESIDENTIAL CODE
(BASED ON THE 2018 INTERNATIONAL RESIDENTIAL CODE)

1. BUILDING/DWELLING CODE: VIRGINIA RESIDENTIAL CODE (VRC) 2018
2. STRUCTURAL CODE: VIRGINIA RESIDENTIAL CODE (VRC) 2018
3. PLUMBING & GAS CODE: VIRGINIA RESIDENTIAL CODE (VRC) 2018
4. MECHANICAL CODE: VIRGINIA RESIDENTIAL CODE (VRC) 2018
5. ELECTRICAL CODE: VIRGINIA RESIDENTIAL CODE (VRC) 2018
6. ENERGY CODE: VIRGINIA RESIDENTIAL CODE (VRC) 2018

STRUCTURAL	LIVE LOADS	DEAD LOADS
ROOF TRUSSES:	30PSF	10PSF
RAFTERS:	30PSF	12PSF
ATTIC FLOORS:	30PSF	12PSF
FLOORS:	40PSF	12PSF
GARAGE FLOORS:	50PSF	50PSF
DECKS:	40PSF	10PSF
BALCONIES:	60PSF	10PSF
STAIRS:	40PSF	20PSF
GROUND SNOW LOAD:	30LBS	
DESIGN WIND SPEED:	115MPH (ULTIMATE)	
SEISMIC DESIGN CATEGORY:	B	
FROST LINE:	24"	
SOIL BEARING PRESSURE:	1500PSF	

ENVIRONMENTAL	
DECAY PROT REQUIRED:	SLIGHT TO MODERATE
TERMITE PROT REQUIRED:	MODERATE TO HEAVY
CLIMATE ZONE:	4-NON MARINE
ENERGY CODE:	2018 IECC CODE REQUIRED
WINDOWS:	MINIMUMS
SKYLIGHTS:	U-VALUE: 0.32
CEILING:	U-VALUE: 0.55
WALLS:	R49
FLOOR:	R15 (CAVITY)
CRAWLSPACE:	R19
SLAB:	R10 (CONTINUOUS)
	R10 (CONTINUOUS)

ZONING INFORMATION

LEGAL DESCRIPTION

ZONING

YEAR BUILT

HISTORIC DESIGNATION — NO

	ALLOWED	EXISTING	PROPOSED
LOT AREA			
NUMBER OF STORIES	2.0	2.0	2.0
BUILDING HEIGHT			
LOT COVERAGE	xxxx.xxSF	xxxx.xxSF	xxxx.xxSF
LOT COVERAGE %	xx%	xx%	xx%

SPECIFICATIONS

01	GENERAL REQUIREMENTS
02	SITE WORK
03	CONCRETE
04	MASONRY
05	METALS
06	WOOD
07	THERMAL + MOISTURE PROTECTION
08	DOORS + WINDOWS
09	FINISHES
10	SPECIALTIES
11	EQUIPMENT
12	MECHANICAL
13	ELECTRICAL

stadlerdesign
architecture | interiors
2000 Duke Street | 3rd Floor
Alexandria, VA 22314

DeThomas

118 S Fayette St
Alexandria, VA 22314

Consultants:

Issued

No.:	Description:	Date:

Key Plan:

Seal & Signature:

Sheet Name:
PROJECT INFORMATION

Project No.: 19001

Sheet No.: G-001

Scale: 1/4" = 1'-0"

8/14/2025 2:18:11 PM

COPYRIGHT 2025

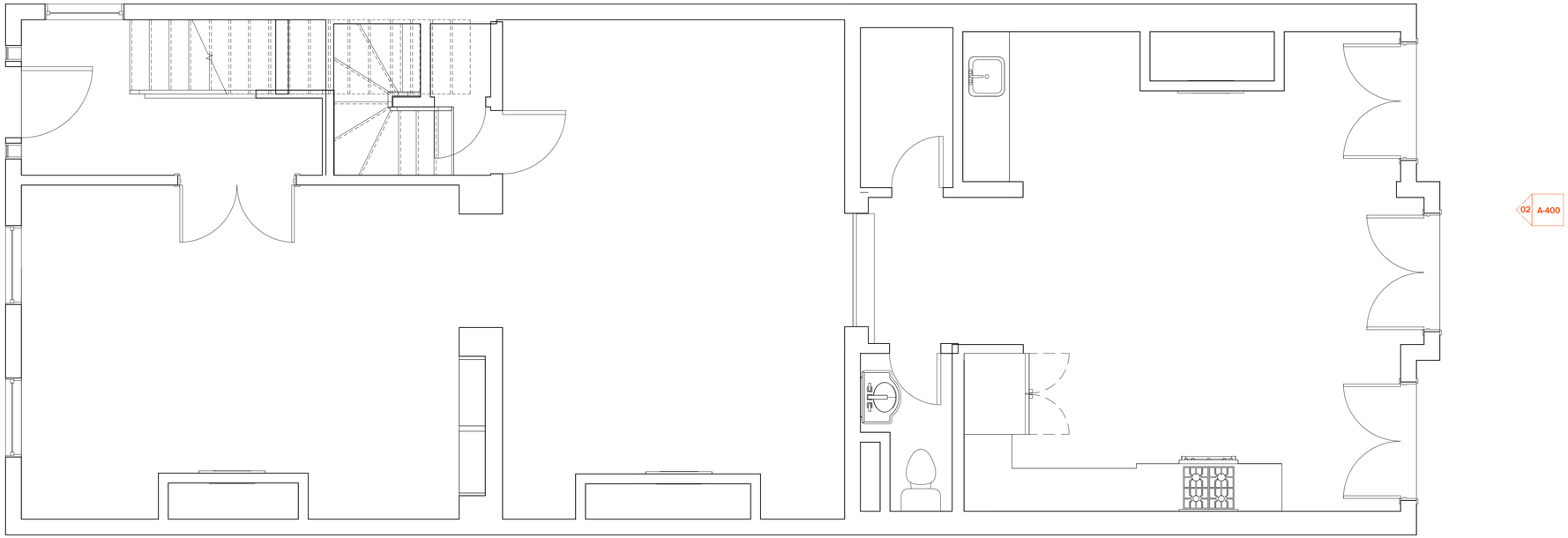

01 FIRST FLOOR - EXISTING
3/8" = 1'-0"

GENERAL NOTES

1. VERIFY ALL EXISTING DIMENSIONS.
2. PROTECT ALL MATERIALS NOTED AS EXISTING TO REMAIN, OR NOT NOTED TO BE DEMOLISHED.

LEGEND

stadlerdesign
architecture | interiors
2000 Duke St | 3rd Floor
Alexandria, VA 22314

DeThomas

118 S Fayette St
Alexandria, VA 22314

Consultants:

Issued For:

No.:	Description:	Date:
1	ISSUE FOR PERMIT	XX/XX/2025

Key Plan:

Seal & Signature:

COMMONWEALTH OF VIRGINIA
CODY L STADLER
Lic. No. 0401019057
ARCHITECT

Sheet Name:

FIRST FLOOR - EXISTING

Project No.: 19001

Sheet No.: AX-101

Scale: As indicated

8/14/2025 2:18:13 PM

COPYRIGHT 2025

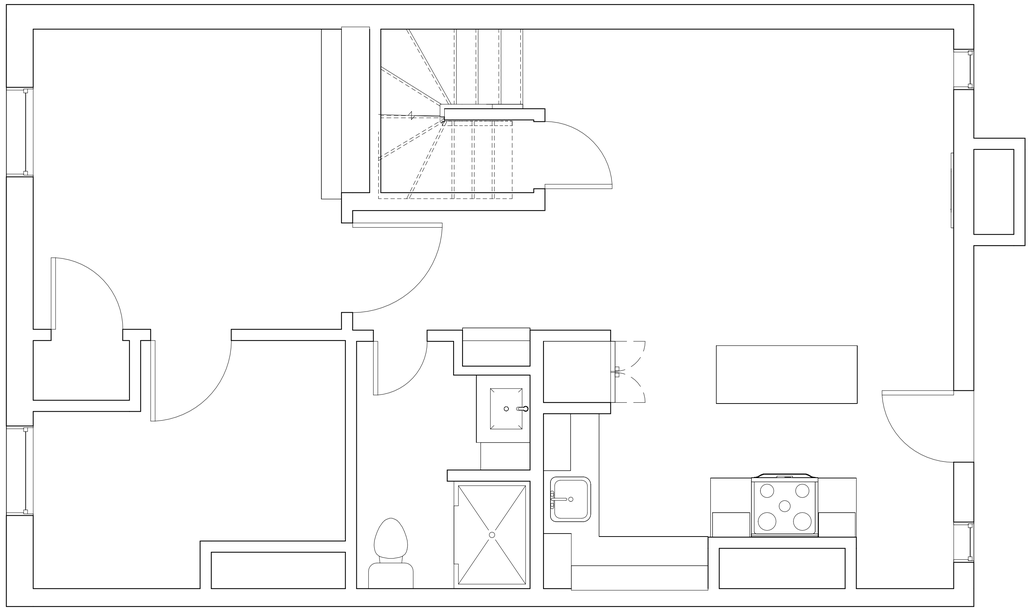

02 A-400

01 BASEMENT - EXISTING

3/8" = 1'-0"

GENERAL NOTES

1. VERIFY ALL EXISTING DIMENSIONS.
2. PROTECT ALL MATERIALS NOTED AS EXISTING TO REMAIN, OR NOT NOTED TO BE DEMOLISHED.

LEGEND

stadlerdesign
architecture | interiors
2000 Duke St | 3rd Floor
Alexandria, VA 22314

DeThomas

118 S Fayette St
Alexandria, VA 22314

Consultants:

Issued For:

No.:	Description:	Date:
1	ISSUE FOR PERMIT	XX/XX/2025

Key Plan:

Seal & Signature:

COMMONWEALTH OF VIRGINIA
CODY L STADLER
Lic. No. 0401019057
ARCHITECT

Sheet Name:

BASEMENT - EXISTING

Project No.: 19001

Sheet No.: AX-100

Scale: As indicated

8/14/2025 2:18:13 PM

COPYRIGHT 2025

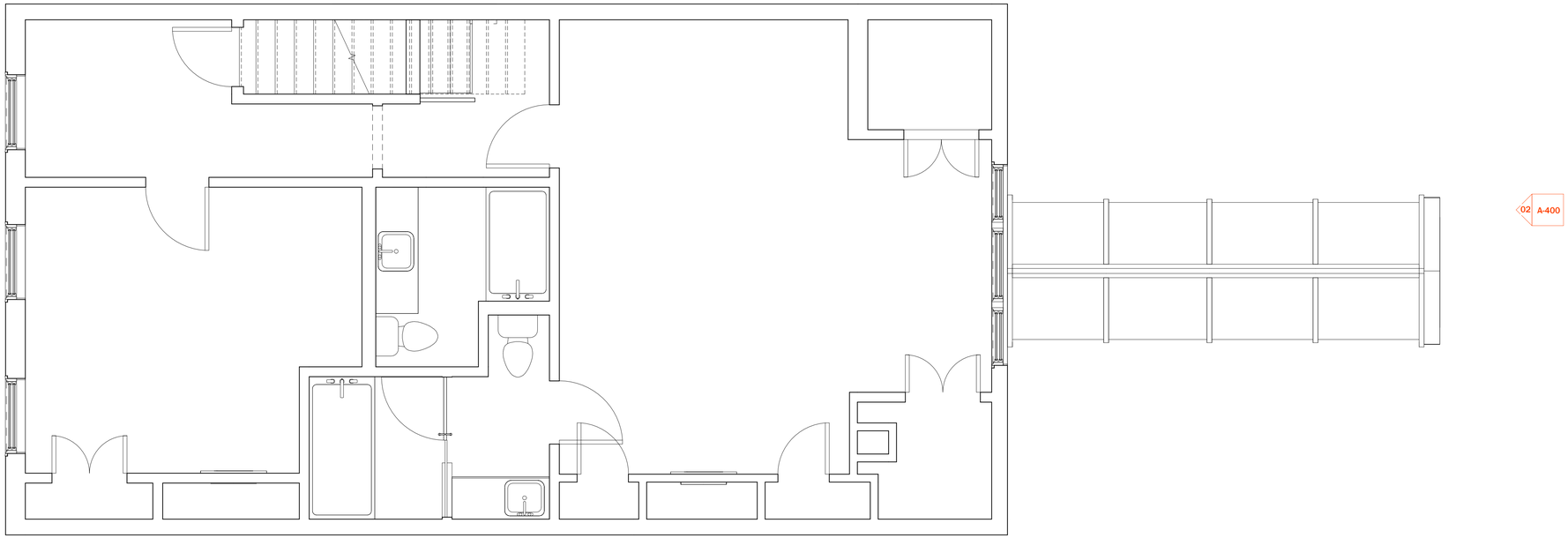

01 SECOND FLOOR - EXISTING
3/8" = 1'-0"

GENERAL NOTES

1. VERIFY ALL EXISTING DIMENSIONS.
2. PROTECT ALL MATERIALS NOTED AS EXISTING TO REMAIN, OR NOT NOTED TO BE DEMOLISHED.

LEGEND

stadlerdesign
architecture | interiors
2000 Duke St | 3rd Floor
Alexandria, VA 22314

DeThomas

118 S Fayette St
Alexandria, VA 22314

Consultants:

Issued For:

No.:	Description:	Date:
1	ISSUE FOR PERMIT	XX/XX/2025

Key Plan:

Seal & Signature:

COMMONWEALTH OF VIRGINIA
CODY L STADLER
Lic. No. 0401019057
ARCHITECT

Sheet Name:

SECOND FLOOR - EXISTING

Project No.: 19001

Sheet No.: AX-102

Scale: As indicated

8/14/2025 2:18:14 PM

COPYRIGHT 2025

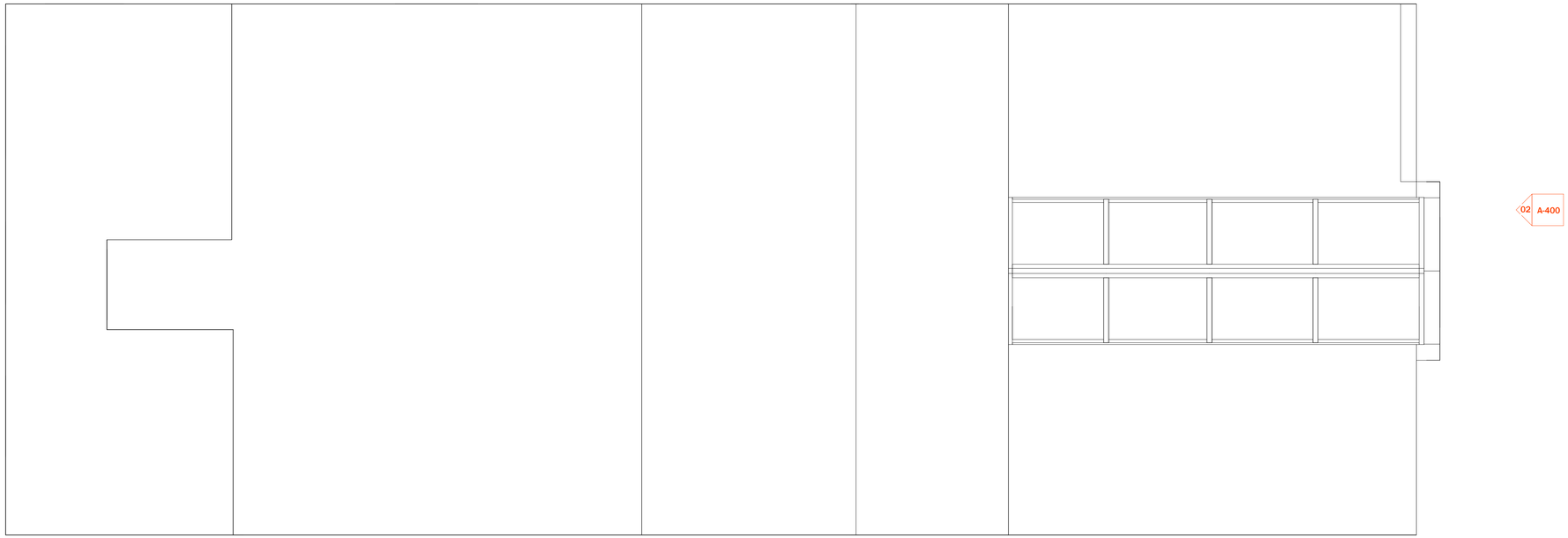

01 ROOF - EXISTING
3/8" = 1'-0"

GENERAL NOTES

1. VERIFY ALL EXISTING DIMENSIONS.
2. PROTECT ALL MATERIALS NOTED AS EXISTING TO REMAIN, OR NOT NOTED TO BE DEMOLISHED.

LEGEND

stadlerdesign
architecture | interiors
2000 Duke St | 3rd Floor
Alexandria, VA 22314

DeThomas

118 S Fayette St
Alexandria, VA 22314

Consultants:

Issued For:

No.:	Description:	Date:
1	ISSUE FOR PERMIT	XX/XX/2025

Key Plan:

Seal & Signature:

COMMONWEALTH OF VIRGINIA
CODY L STADLER
Lic. No. 0401019057
ARCHITECT

Sheet Name:

ROOF - EXISTING

Project No.: 19001

Sheet No.: AX-103

Scale: As indicated

8/14/2025 2:18:15 PM

COPYRIGHT 2025

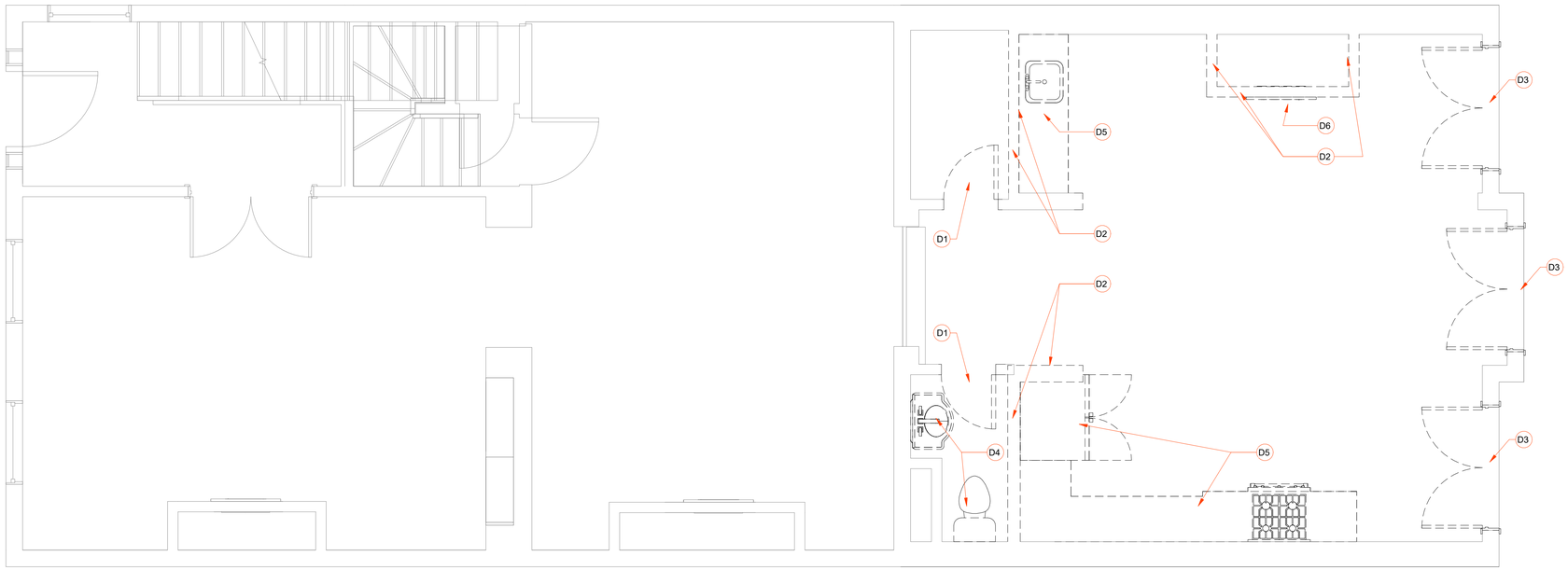

01 FIRST FLOOR - DEMO

3/8" = 1'-0"

GENERAL NOTES

1. VERIFY ALL EXISTING DIMENSIONS, QUANTITIES AND LOCATIONS BEFORE BEGINNING DEMOLITION.
2. VERIFY ALL OPENINGS, DOORS AND EXISTING WATERPROOFING BEFORE DEMOLITION OF WINDOWS AND EXTERIOR DOORS.
3. PROTECT ALL EXISTING FINISHES NOT TO BE DEMOLISHED.

LEGEND

	EXISTING		NEW FINISH
	TO BE DEMOLISHED		QUARTZ
	FINISH TO BE DEMOLISHED		TILE
	NEW PARTITION		WOOD

D1 DEMO EXISTING DOOR AND FRAME.

D2 DEMO EXISTING WALL.

D3 DEMO EXISTING WINDOW AND FRAME.

D4 DEMO EXISTING PLUMBING FIXTURES

D5 DEMO EXISTING CABINETRY AND APPLIANCES

D6 DEMO EXISTING FIREPLACE AND CHIMNEY

stadlerdesign
architecture | interiors
2000 Duke St | 3rd Floor
Alexandria, VA 22314

DeThomas

118 S Fayette St
Alexandria, VA 22314

Consultants:

Issued For:

No.:	Description:	Date:
1	ISSUE FOR PERMIT	XX/XX/2025

Key Plan:

Seal & Signature:

COMMONWEALTH OF VIRGINIA
CODY L STADLER
Lic. No. 0401019057
ARCHITECT

Sheet Name:

FIRST FLOOR - DEMO

Project No.: 19001

Sheet No.: AD-101

Scale: As indicated

8/14/2025 2:18:17 PM

COPYRIGHT 2025

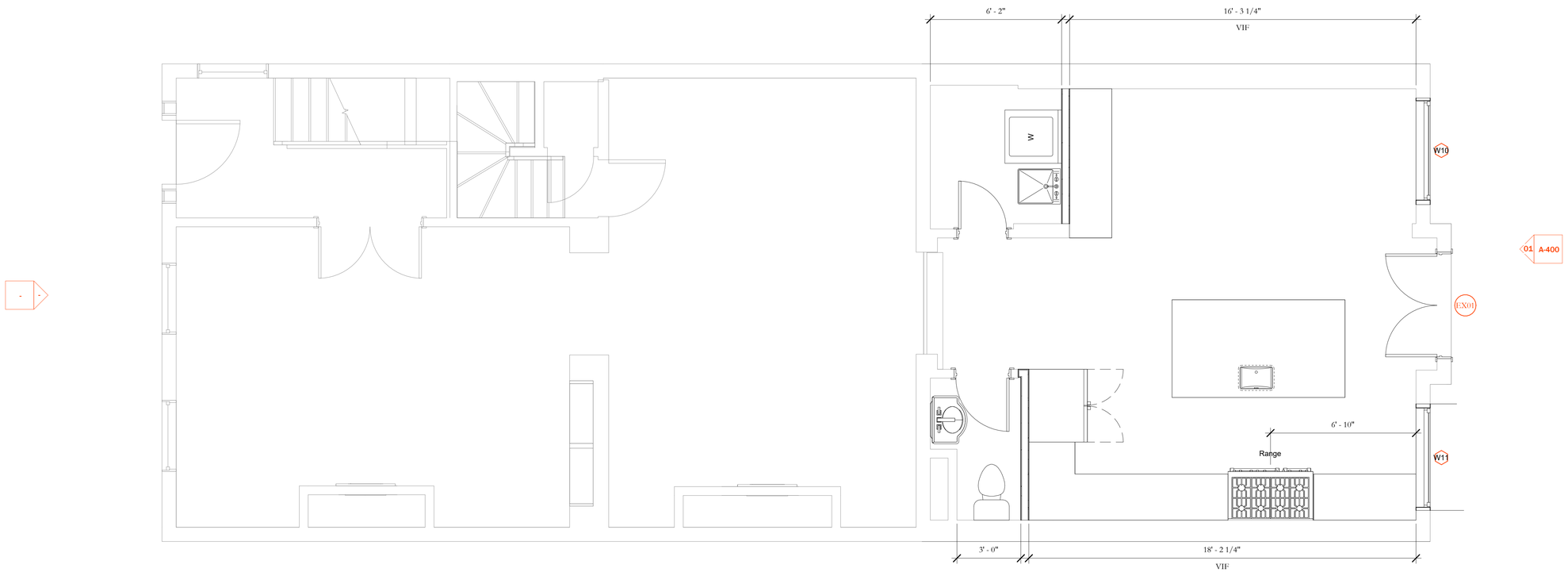

01 FIRST FLOOR

3/8" = 1'-0"

GENERAL NOTES

1. VERIFY DIMENSION OF ALL WINDOWS AND EXTERIOR DOORS TO BE REPLACED.
2. BLEND ALL WALL AND CEILINGS NOTED "FOR FLUSH APPEARANCE" TO PROVIDE VISUAL FLATNESS.
3. BLEND NEW HARDWOOD FLOORING INTO EXISTING TO PROVIDE SEAMLESS APPEARANCE.
4. PROVIDE NEW AIR REGISTERS AND RETURN GRILLES IN RENOVATED SPACE.
5. REPLACE ALL TRIM AND MOULDING TO MATCH EXISTING.
6. PROVIDE SAMPLES OF FINISH MATERIALS TO ARCHITECT FOR FINAL APPROVAL.
7. PROVIDE 1/2" TOLERANCE TO ALL NEW APPLIANCES.
8. REMOVE ALL ABANDONED WIRING, CABLES, ETC. IN OPEN CEILING SPACE.
9. REPLACE ALL SWITCHPLATES AND CONVENIENCE OUTLET PLATES.
10. REPLACE ALL AIR SUPPLY AND RETURN REGISTERS.

LEGEND

EXISTING	NEW FINISH
TO BE DEMOLISHED	QUARTZ
FINISH TO BE DEMOLISHED	TILE
NEW PARTITION	WOOD

stadlerdesign
architecture | interiors
2000 Duke St | 3rd Floor
Alexandria, VA 22314

DeThomas

118 S Fayette St
Alexandria, VA 22314

Consultants:

Issued For:

No.:	Description:	Date:
1	ISSUE FOR PERMIT	XX/XX/2025

Key Plan:

Seal & Signature:

COMMONWEALTH OF VIRGINIA
CODY L STADLER
Lic. No. 0401019057
ARCHITECT

Sheet Name:

FIRST FLOOR

Project No.: 19001

Sheet No.: A-101

Scale: As indicated

8/14/2025 2:18:17 PM

COPYRIGHT 2025

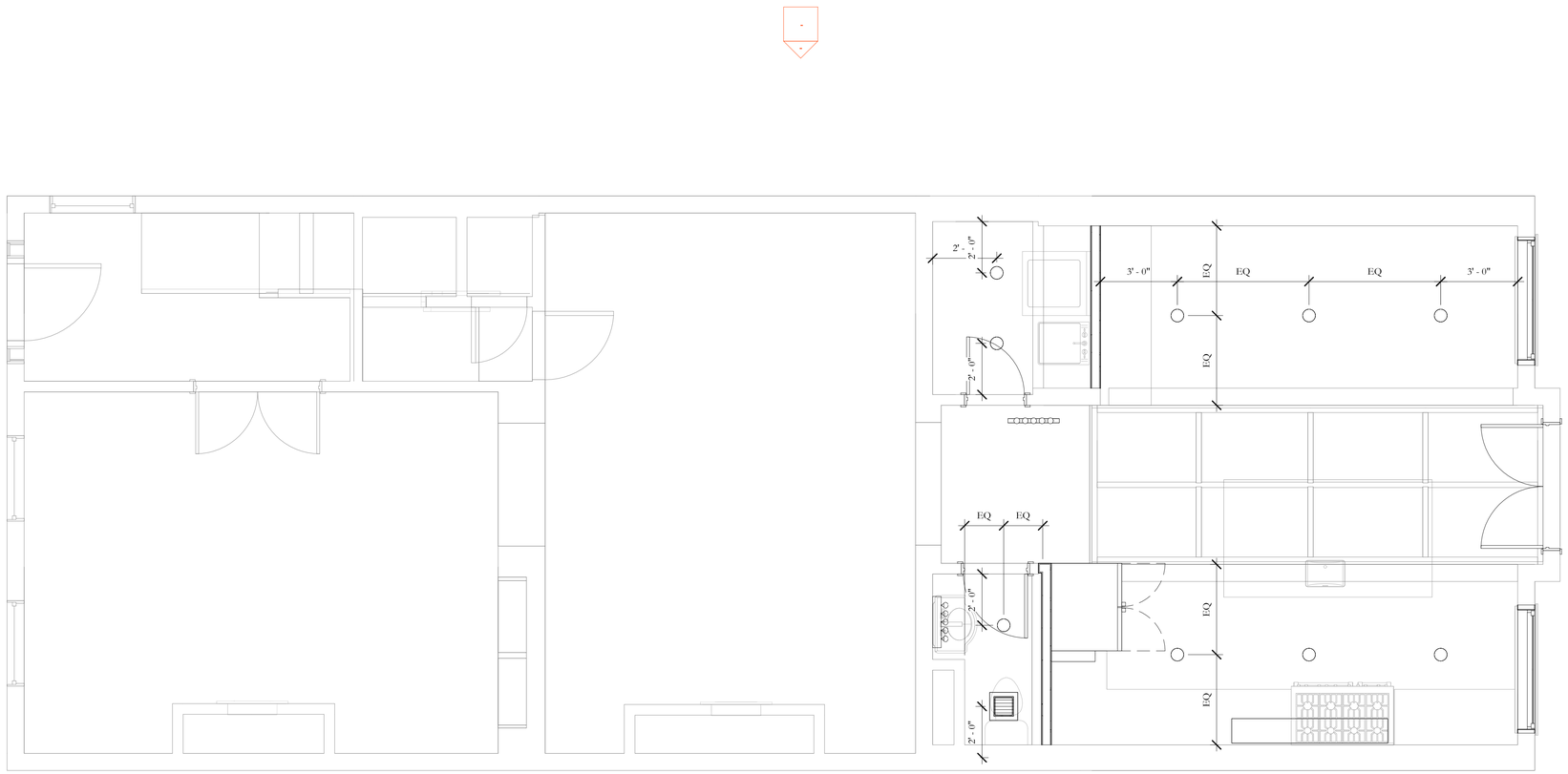

01 FIRST FLOOR

3/8" = 1'-0"

GENERAL NOTES

IT IS THE INTENT THAT ALL RECEPTACLES, SWITCHES AND DEVICES BE CENTERED ON ALL FINISHED SURFACES, HORIZONTALLY AND VERTICALLY UNLESS NOTED OTHERWISE. IF FIELD CONDITIONS ARISE THAT MAKE CENTERING IMPOSSIBLE, CONSULT THE ARCHITECT FOR GUIDANCE ON FINAL PLACEMENT. CONTRACTOR SHALL COORDINATE ALL ROOF FRAMING TO ALLOW THE CENTERING SHOWN ON THIS PLAN FOR ALL RECESSED LIGHTING. IF ADDITIONAL FRAMING IS REQUIRED TO ACCOMMODATE THIS LAYOUT, THE CONTRACTOR SHALL INCL. SUCH FRAMING AS PART OF THE COST OF THE WORK. ANY COORDINATION SHALL TAKE PLACE DURING ROUGH FRAMING, PRIOR TO ROUGH-IN.

A. INSTALL ALL RECEPTACLES AT (INSERT HEIGHT)" A.F.F. (HORIZONTALLY/VERTICALLY), U.N.O.
B. INSTALL ALL ABOVE COUNTER OUTLETS (HORIZONTALLY/VERTICALLY) WITH A CENTERLINE OF(INSERT HEIGHT)" A.F.F., U.N.O.
C. INSTALL ALL SWITCHES (HORIZONTALLY/VERTICALLY) WITH CENTERLINE AT (INSERT HEIGHT)A.F.F. INSTALL BLOCKING AS NECESSARY TO ACHIEVE CENTERING.
D. MOUNT CENTERLINE OF THERMOSTATS + KEYPADS AT (INSERT HEIGHT) A.F.F. CENTER ON SWITCHES BELOW IF APPLICABLE.
E. ALL SWITCHES TO BE ON DIMMING CIRCUITS. NOTIFY ARCHITECT PRIOR TO ROUGH-IN OF ANY FIXTURE LOCATIONS THAT ARE NOT ABLE TO BE ON A DIMMING CIRCUIT SO ALTERNATE PLANS CAN BE MADE.
F. ALL EXPOSED SWITCHES AND OUTLETS TO BE *(INSERT SERIES) SERIES WITH (INSERTCOVERPLATES) COVERPLATES BY (INSERT MANUF).
G. DEVICE COLOR: (INSERT COLOR) WITH MATCHING (INSERT COVERPLATE) COVERPLATES.**COORDINATE THESE SELECTIONS WITH ARCHITECT PRIOR TO ORDERING
H. ALL OUTLETS IN BATHS, AT KITCHEN COUNTERS, AND WITHIN (INSERT CODE REQUIREMENTS) OF A SINK SHALL BE GFCI CIRCUITS.
I. INSTALLATION SHALL CONFORM TO CURRENT ADOPTED (INSERT YOUR REFERENCE NATIONAL ELECTRICAL CODE). IF THIS REQUIRES THE ADDITION OF RECEPTACLES, WIRING, DEVICES, SPECIAL CIRCUITING, BREAKERS, INTERUPTERS, OR OTHER ITEMS NOT INDICATED ON THE PLANS, THE ELECTRICIAN SHALL MAKE THE CONTRACTOR AND ARCHITECT AWARE OF ANY OMISSIONS AND SHALL INCLUDE THEM AS PART OF THE COST OF THE WORK.
J. COORDINATE LOCATION OF ALL ELECTRICAL DEVICES WITH ANY INTERIOR ELEVATIONS.
K. NO DISTINCTION IS MADE ON THESE PLANS BETWEEN CIRCUITS REQUIRING SINGLE, THREE-WAY AND FOUR-WAY SWITCHES, THE ELECTRICAL SUBCONTRACTOR IS RESPONSIBLE FOR PROVIDING ALL NECESSARY SYSTEM COMPONENTS TO ACHIEVE THE LIGHTING CONTROLS AS DRAWN.

LEGEND

- TV HOOK-UP (LIST CABLING REQ'D: CAT6, STRUCTURED CABLING, ETC.
- KEYPAD
- ETHERNET / PHONE (LIST JACK REQUIREMENTS)
- SWITCH (DIMMING CIRCUIT)
- DUPLEX RECEPTABLE (USB INDICATES CHARGING OUTLET/STATION)
- QUAD RECEPTACLE
- GFCI DUPLEX RECEPTACLE
- FLOOR DUPLEX RECEPTACLE (SPECIFY RECESSED OR SURFACE)
- THERMOSTAT
- EXHAUST FAN
- HEAT DETECTOR (LOW = LOW TEMP SENSOR, LP = LP GAS DETECTOR
- SMOKE/CO DETECTOR
- REMOTE TRANSFORMER
- FIXTURE TYPE, SEE SCHED. SURFACE MTD. LIGHT
- RECESSED LIGHT (ARROW = DIRECTIONAL)
- WALL MOUNTED LIGHT
- MONOPOINT
- PLUG-IN FIXTURE
- PENDANT
- CEILING MOUNTED SPEAKER
- IN-WALL SPEAKER
- LED STRIP LIGHT
- STEP LIGHT
- IN-GROUND/WELL LIGHT
- TRACK/HEADS
- WALL MOUNTED SWING-ARM LIGHT
- ELECTRICAL PANEL

stadlerdesign
architecture | interiors
2000 Duke St | 3rd Floor
Alexandria, VA 22314

DeThomas

118 S Fayette St
Alexandria, VA 22314

Consultants:

Issued For:

No.:	Description:	Date:
1	ISSUE FOR PERMIT	XX/XX/2025

Key Plan:

Seal & Signature:

COMMONWEALTH OF VIRGINIA
CODY L STADLER
Lic. No. 0401019057
ARCHITECT

Sheet Name:

FIRST FLOOR RCP

Project No.: 19001

Sheet No.: A-201

Scale: As indicated

8/14/2025 2:18:19 PM

COPYRIGHT 2025

02 EXISTING EAST ELEVATION
1/2" = 1'-0"

01 PROPOSED EAST BUILDING ELEVATION
1/2" = 1'-0"

stadlerdesign
architecture | interiors
2000 Duke St | 3rd Floor
Alexandria, VA 22314

DeThomas

118 S Fayette St
Alexandria, VA 22314

Consultants:

Issued For:

No.:	Description:	Date:
1	ISSUE FOR PERMIT	XX/XX/2025

Key Plan:

Seal & Signature:

COMMONWEALTH OF VIRGINIA
CODY L STADLER
Lic. No. 0401019057
ARCHITECT

Sheet Name:

BUILDING ELEVATIONS

Project No.: 19001

Sheet No.: A-400

Scale: 1/2" = 1'-0"

8/14/2025 2:18:26 PM

COPYRIGHT 2025

DeThomas Rear Elevation Renovation
BAR Presentation

118 S Fayette St
Alexandria, VA 22314

stadlerdesign
architecture | interiors
stadlerdesign.com

REAR ELEVATION

REAR ELEVATION

Exhibit B
Proposed Work

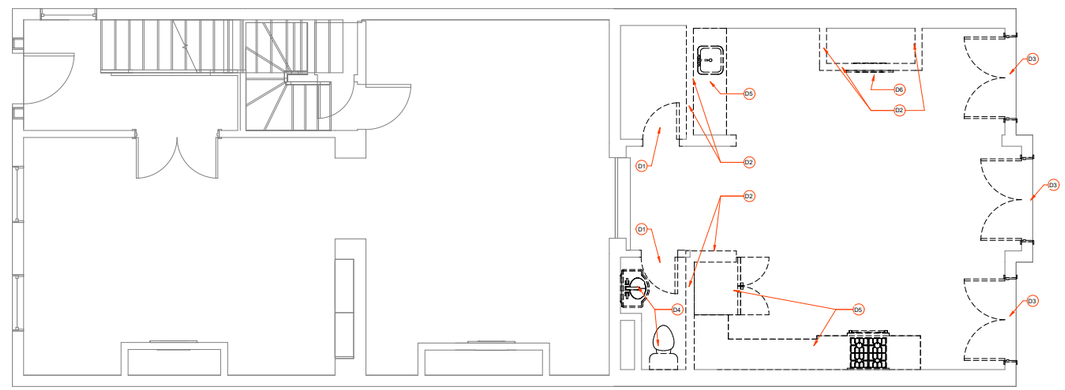

01 FIRST FLOOR - DEMO
3/8" = 1'-0"

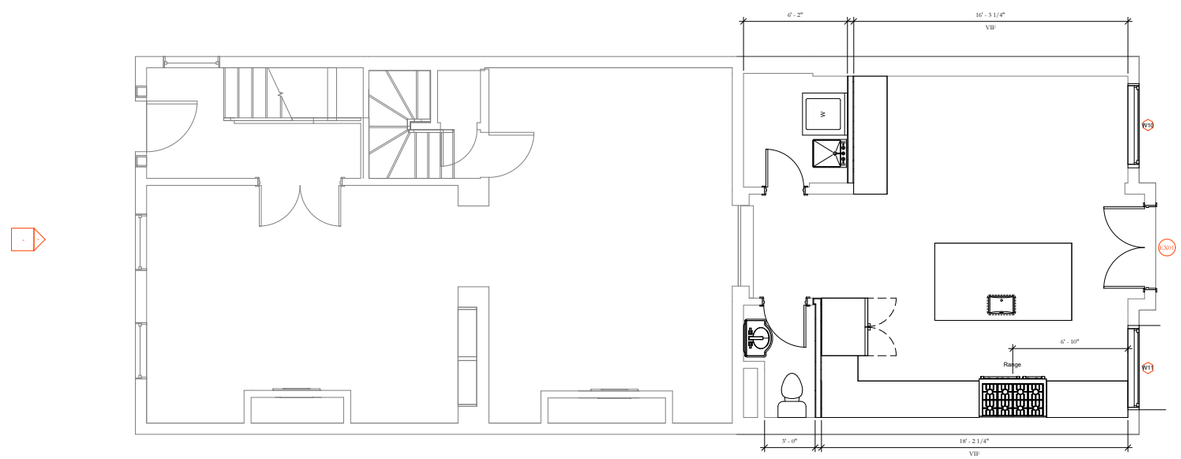

01 FIRST FLOOR
3/8" = 1'-0"

Exhibit B
Proposed Work

02 EXISTING EAST ELEVATION
1/2" = 1'-0"

01 PROPOSED EAST BUILDING ELEVATION
1/2" = 1'-0"

Exhibit B
Proposed Work

NEW CONSTRUCTION

Product: Replacement Rear Door to Brick Patio
Make/Model: Marvin
Color: Ebony Clad Exterior
Location: See next page, highlighted by green box

MARVIN

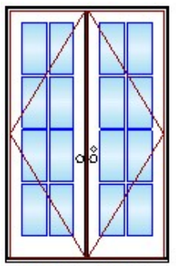

As Viewed From The Exterior

Egress Information
Width: 51 13/16" Height: 89 5/8"
Net Clear Opening: 32.25 SqFt
Performance Information
U-Factor: 0.31
Solar Heat Gain Coefficient: 0.21
Visible Light Transmittance: 0.36
CPD Number: MAR-N-476-02989-00001
Performance Grade
Licensee #1163
AAMA/WDMA/CSA/101/I.S.2/A440-11
LC-PG40 3632X2489 mm (143X98 in)
Water Resistance: 6.06 psf
LC-PG40 DP +40/-40
FL39753

Ebony Clad Exterior
Painted Interior Finish - Designer Black - Pine Interior
Ultimate Inswing French Door G2 6 9/16" - XX Right Hand
Left Panel
Ebony Clad Sash Exterior
Painted Interior Finish - Designer Black - Pine Sash Interior
IG
Tempered Low E2 w/Argon
Black Perimeter and Spacer Bar
7/8" SDL - With Spacer Bar - Black
Rectangular - Special Cut 2W4H
Ebony Clad Ext - Painted Interior Finish - Designer Black - Pine Int
Putty Exterior Glazing Profile
Ogee Interior Glazing Profile
Standard Bottom Rail
Right Panel
Ebony Clad Sash Exterior
Painted Interior Finish - Designer Black - Pine Sash Interior
IG
Tempered Low E2 w/Argon
Black Perimeter and Spacer Bar
7/8" SDL - With Spacer Bar - Black
Rectangular - Special Cut 2W4H
Ebony Clad Ext - Painted Interior Finish - Designer Black - Pine Int
Putty Exterior Glazing Profile
Ogee Interior Glazing Profile
Standard Bottom Rail
Contemporary Lever(s)
Multi-Point Lock on Active Panel
Matte Black Active Exterior Handle Set on Active Panel Keyed
Matte Black Active Interior Handle Set on Active Panel
Keyed
Multi-Point Lock on Inactive Panel
Matte Black Inactive Exterior Handle Set on Inactive Panel
Matte Black Inactive Interior Handle Set on Inactive Panel
Matte Black Adjustable Hinges 3 Per Panel-
Ebony Performance Sill
Black Weather Strip
6 9/16" Jambs
Thru Jamb Installation w/ Nailing Fin
*****Note: Unit Availability and Price is Subject to Change**

NEW CONSTRUCTION

Product: New Rear Windows
Make/Model: Marvin
Color: Ebony Clad Exterior
Location: See next page, highlighted by red box

MARVIN

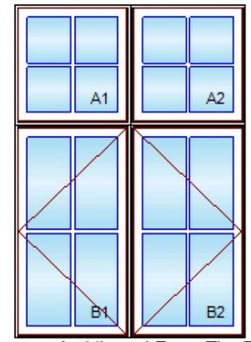

As Viewed From The Exterior

Egress Information A1, A2
No Egress Information available.
Egress Information B1, B2
Width: 19 57/64" Height: 44 57/64"
Net Clear Opening: 6.20 SqFt
Performance Information A1, A2
U-Factor: 0.3
Solar Heat Gain Coefficient: 0.26
Visible Light Transmittance: 0.44
Condensation Resistance: 57
CPD Number: MAR-N-342-60717-00001
Performance Information B1, B2
U-Factor: 0.3
Solar Heat Gain Coefficient: 0.26
Visible Light Transmittance: 0.44
Condensation Resistance: 57
CPD Number: MAR-N-342-60717-00001
Performance Grade A1, A2
Licensee #918
AAMA/WDMA/CSA/101/I.S.2/A440-11
CW-PG50 914X2442 mm (36X96.13 in)
Water Resistance: 7.5 psf
CW-PG50 DP +50/-50
FL31335
Performance Grade B1, B2
Licensee #918
AAMA/WDMA/CSA/101/I.S.2/A440-11
CW-PG50 914X2442 mm (36X96.13 in)
Water Resistance: 7.5 psf
CW-PG50 DP +50/-50
FL31335

Ebony Clad Exterior
Painted Interior Finish - Designer Black - Pine Interior
2W2H - Rectangle Assembly
Ultimate Casement - Stationary
Ebony Clad Sash Exterior
Painted Interior Finish - Designer Black - Pine Sash Interior
IG - 3/4"
Low E2 w/Argon
Black Perimeter and Spacer Bar
7/8" SDL - With Spacer Bar - Black
Rectangular - Special Cut 2W2H
Ebony Clad Ext - Painted Interior Finish - Designer Black - Pine Int
Putty Exterior Glazing Profile
Ogee Interior Glazing Profile
Standard Bottom Rail
Black Weather Strip
Solid Wood Covers
Ultimate Casement - Stationary
Ebony Clad Sash Exterior
Painted Interior Finish - Designer Black - Pine Sash Interior
IG - 3/4"
Low E2 w/Argon
Black Perimeter and Spacer Bar
7/8" SDL - With Spacer Bar - Black
Rectangular - Special Cut 2W2H
Ebony Clad Ext - Painted Interior Finish - Designer Black - Pine Int
Putty Exterior Glazing Profile
Ogee Interior Glazing Profile
Standard Bottom Rail
Black Weather Strip
Solid Wood Covers
Ultimate Casement - Left Hand
Ebony Clad Sash Exterior
Painted Interior Finish - Designer Black - Pine Sash Interior
IG - 3/4"
Low E2 w/Argon
Black Perimeter and Spacer Bar
7/8" SDL - With Spacer Bar - Black
Rectangular - Special Cut 2W2H
Ebony Clad Ext - Painted Interior Finish - Designer Black - Pine Int
Putty Exterior Glazing Profile
Ogee Interior Glazing Profile
Standard Bottom Rail
Black Weather Strip
Satin Taupe Folding Handle
Satin Taupe Multi - Point Lock
Aluminum Screen
Satin Taupe Surround
Bright View Mesh
Ultimate Casement - Right Hand
Ebony Clad Sash Exterior
Painted Interior Finish - Designer Black - Pine Sash Interior
IG - 3/4"
Low E2 w/Argon
Black Perimeter and Spacer Bar
7/8" SDL - With Spacer Bar - Black

Exhibit B
Proposed Work

02 EXISTING EAST ELEVATION
1/2" = 1'-0"

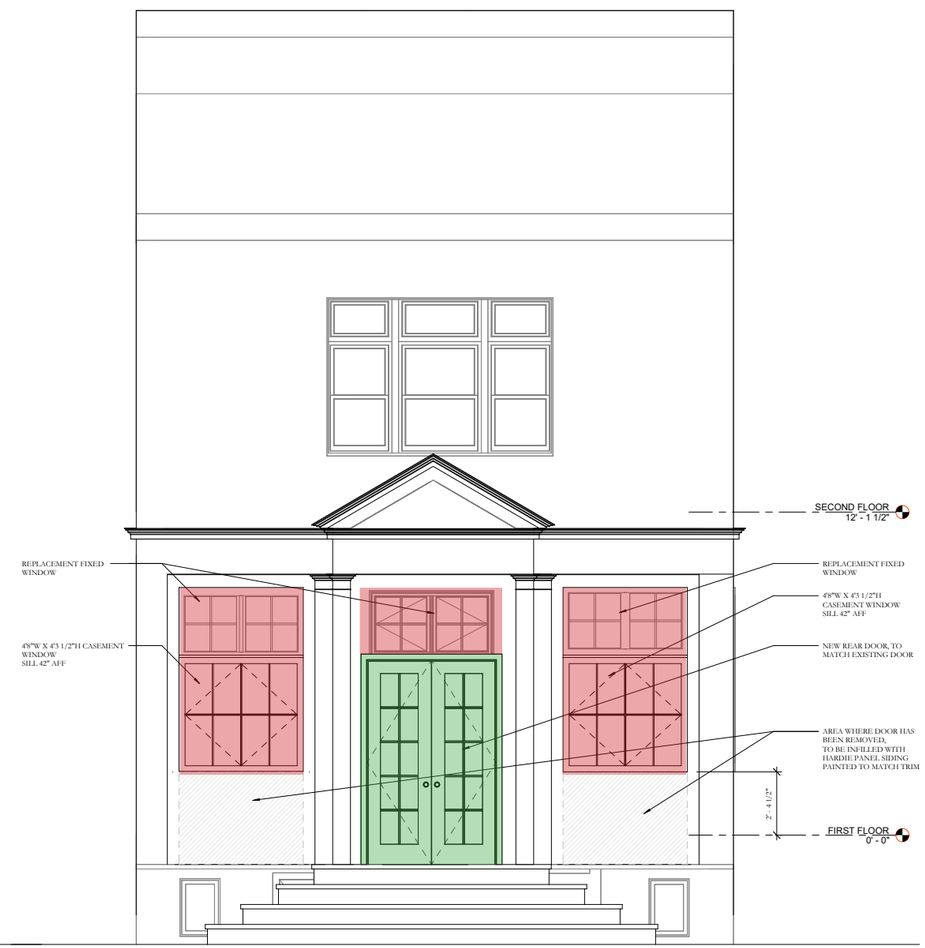

01 PROPOSED EAST BUILDING ELEVATION
1/2" = 1'-0"

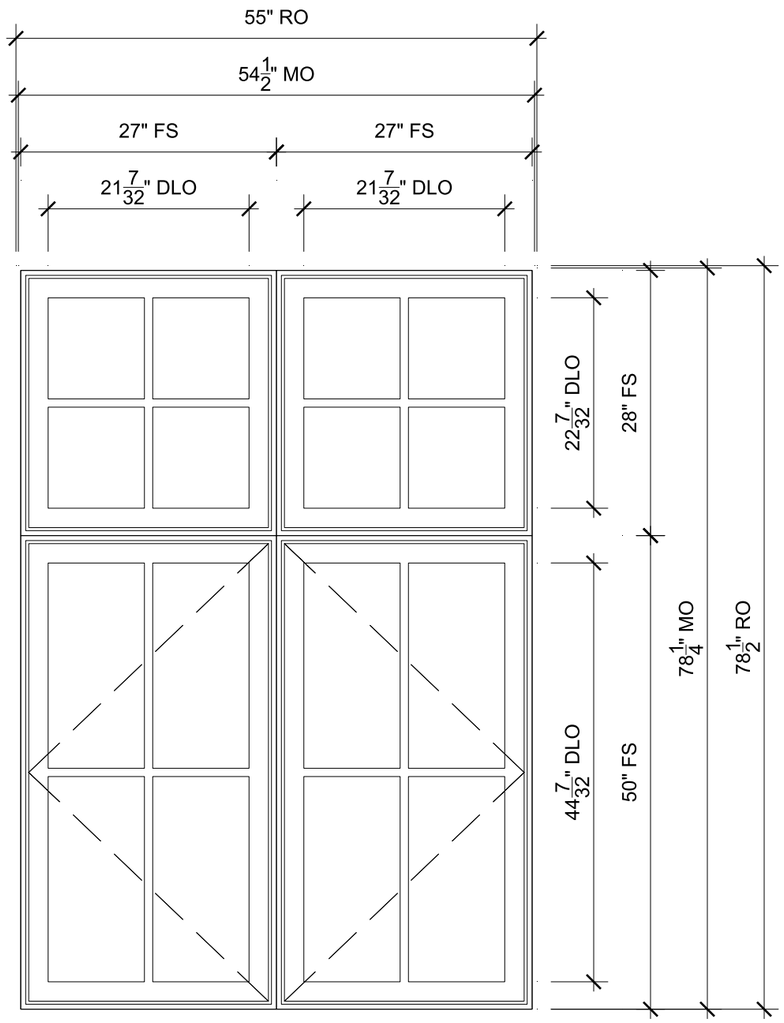

01
SCALE: 3/4" = 1'-0"

1/5 Head
2/5 Horizontal Mullion
3/5 Jamb
4/5 Vertical Mullion
5/5 Jamb
6/5 Vertical Mullion
7/5 Sill
8/5 Divided Lite

SPECIFICATIONS

Line #: 1
Qty: 1
Mark Unit: None
Product Line: Ultimate
Unit Description: Marvin Assembly
Rough Opening: 55" X 78 1/2"
Frame Size: 54" X 78"
Masonry Opening: 54 1/2" X 78 1/4"
Sash Opening: 55" X 78 1/2"
Inside Opening: 55" X 78 1/2"
Exterior Finish: Ebony
Species: Pine
Interior Finish: Painted Interior Finish - Designer Black
Unit Type: [A1/A2] Casement, Stationary,
[B1] Casement, Left Hand,
[B2] Casement, Right Hand
Call Number: None
Glass Information: IG - 3/4", Low E2 w/Argon, Black
Divider Type: 7/8" Rectangular SDL W/ Spacer - Black
Hardware Type: [A1/A2] None,
[B1/B2] Folding Handle, No Sash Travel Limiter
Screen Type: [A1/A2] None, [B1/B2] Aluminum Screen
Hardware Color: [A1/A2] None,
[B1/B2] Satin Taupe
Screen Surround Color: [A1/A2] None, [B1/B2] Satin Taupe
Screen Mesh Type: [A1/A2] None, [B1/B2] Bright View Mesh
Shades: None
Jamb Depth: Standard Jambs, 6 9/16"
Interior Trim: None
Exterior Casing: Casing Type : None
Subsill: Subsill Type : None

MARVIN

ORDERING PRODUCTS WITH REFERENCE TO SHOP DRAWINGS: Before ordering the Marvin products illustrated within these shop drawings, a copy of these drawings accompanied by an approved signature of the purchaser must be returned to the Architectural Division at Marvin Windows & Doors, P.O. Box 100, Warroad, Minnesota 56763. If the Marvin products included herein are ordered without reference to the approved shop drawings, Marvin Windows and Doors assumes no responsibility in guaranteeing product coordination with the drawings.

PROJ/JOB: Marks Woods-DeThomas / 118 S Fayette Street Alexandria, VA
DIST/DEALER: WINDOW & DOOR SHOWPLACE-CIR
DRAWN: THOMAS FALLON
QUOTE#: SDFH7LH PK VER:0004.16.01 CREATED: 08/14/2025 REVISION:

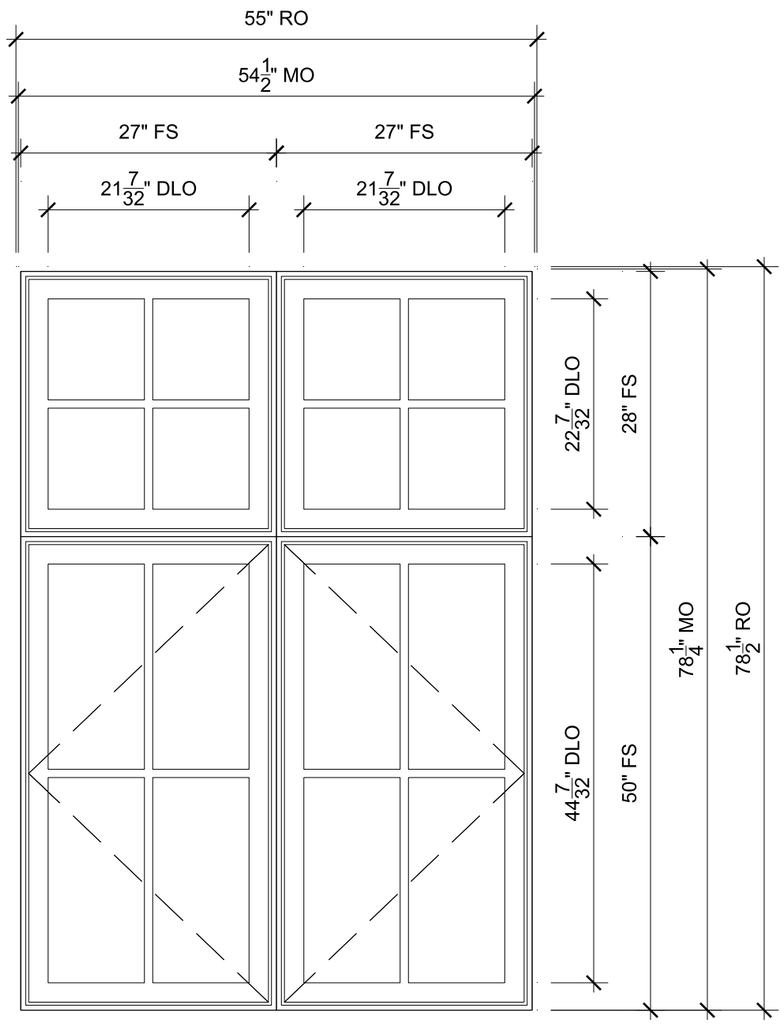

02

SCALE: 3/4" = 1'-0"

1/5 Head	2/5 Horizontal Mullion	3/5 Jamb
4/5 Vertical Mullion	5/5 Jamb	6/5 Vertical Mullion
7/5 Sill	8/5 Divided Lite	

SPECIFICATIONS

Line #: 2
Qty: 1
Mark Unit: None
Product Line: Ultimate
Unit Description: Marvin Assembly
Rough Opening: 55" X 78 1/2"
Frame Size: 54" X 78"
Masonry Opening: 54 1/2" X 78 1/4"
Sash Opening: 55" X 78 1/2"
Inside Opening: 55" X 78 1/2"
Exterior Finish: Ebony
Species: Pine
Interior Finish: Painted Interior Finish - Designer Black
Unit Type: [A1/A2] Casement, Stationary,
[B1] Casement, Left Hand,
[B2] Casement, Right Hand
Call Number: None
Glass Information: IG - 3/4", Low E2 w/Argon, Black
Divider Type: 7/8" Rectangular SDL W/ Spacer - Black
Hardware Type: [A1/A2] None,
[B1/B2] Folding Handle, No Sash Travel Limiter
Screen Type: [A1/A2] None, [B1/B2] Aluminum Screen
Hardware Color: [A1/A2] None,
[B1/B2] Satin Taupe
Screen Surround Color: [A1/A2] None, [B1/B2] Satin Taupe
Screen Mesh Type: [A1/A2] None, [B1/B2] Bright View Mesh
Shades: None
Jamb Depth: Standard Jambs, 6 9/16"
Interior Trim: None
Exterior Casing: Casing Type : None
Subsill: Subsill Type : None

MARVIN

ORDERING PRODUCTS WITH REFERENCE TO SHOP DRAWINGS: Before ordering the Marvin products illustrated within these shop drawings, a copy of these drawings accompanied by an approved signature of the purchaser must be returned to the Architectural Division at Marvin Windows & Doors, P.O. Box 100, Warroad, Minnesota 56763. If the Marvin products included herein are ordered without reference to the approved shop drawings, Marvin Windows and Doors assumes no responsibility in guaranteeing product coordination with the drawings.

PROJ/JOB: Marks Woods-DeThomas / 118 S Fayette Street Alexandria, VA
DIST/DEALER: WINDOW & DOOR SHOWPLACE-CIR
DRAWN: THOMAS FALLON
QUOTE#: SDFH7LH PK VER:0004.16.01 CREATED: 08/14/2025 REVISION:

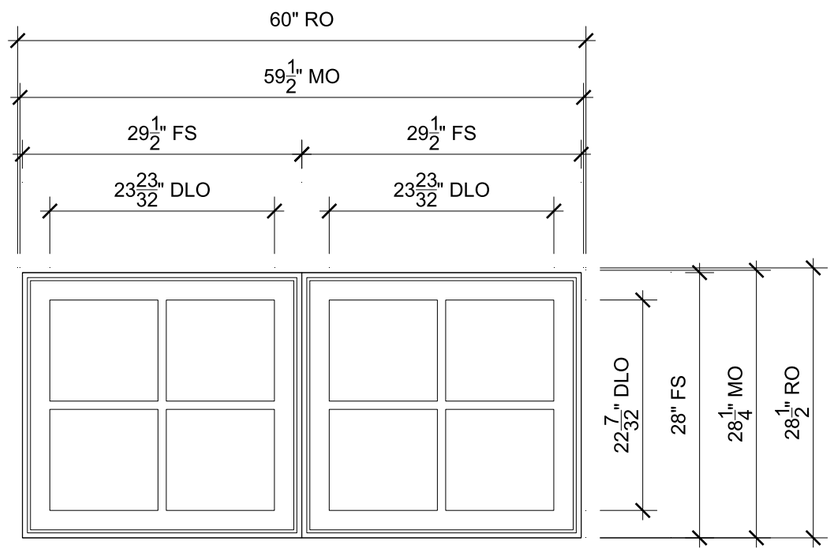

03

SCALE: 3/4" = 1'-0"

1/5 Head
3/5 Jamb
4/5 Vertical Mullion
1/6 Sill
8/5 Divided Lite

SPECIFICATIONS

Line #: 3
Qty: 1
Mark Unit: None
Product Line: Ultimate
Unit Description: Marvin Assembly
Rough Opening: 60" X 28 1/2"
Frame Size: 59" X 28"
Masonry Opening: 59 1/2" X 28 1/4"
Sash Opening: 60" X 28 1/2"
Inside Opening: 60" X 28 1/2"
Exterior Finish: Ebony
Species: Pine
Interior Finish: Painted Interior Finish - Designer Black
Unit Type: Casement Picture
Call Number: None
Glass Information: IG - 3/4", Low E2 w/Argon, Black
Divider Type: 7/8" Rectangular SDL W/ Spacer - Black
Hardware Type: None
Screen Type: None
Hardware Color: None
Screen Surround Color: None
Screen Mesh Type: None
Shades: None
Jamb Depth: Standard Jambs, 6 9/16"
Interior Trim: None
Exterior Casing: Casing Type : None
Subsill: Subsill Type : None

MARVIN

ORDERING PRODUCTS WITH REFERENCE TO SHOP DRAWINGS:
Before ordering the Marvin products illustrated within these shop drawings, a copy of these drawings accompanied by an approved signature of the purchaser must be returned to the Architectural Division at Marvin Windows & Doors, P.O. Box 100, Warroad, Minnesota 56763. If the Marvin products included herein are ordered without reference to the approved shop drawings, Marvin Windows and Doors assumes no responsibility in guaranteeing product coordination with the drawings.

PROJ/JOB: Marks Woods-DeThomas / 118 S Fayette Street Alexandria, VA
DIST/DEALER: WINDOW & DOOR SHOWPLACE-CIR
DRAWN: THOMAS FALLON
QUOTE#: SDFH7LH PK VER:0004.16.01 CREATED: 08/14/2025 REVISION:

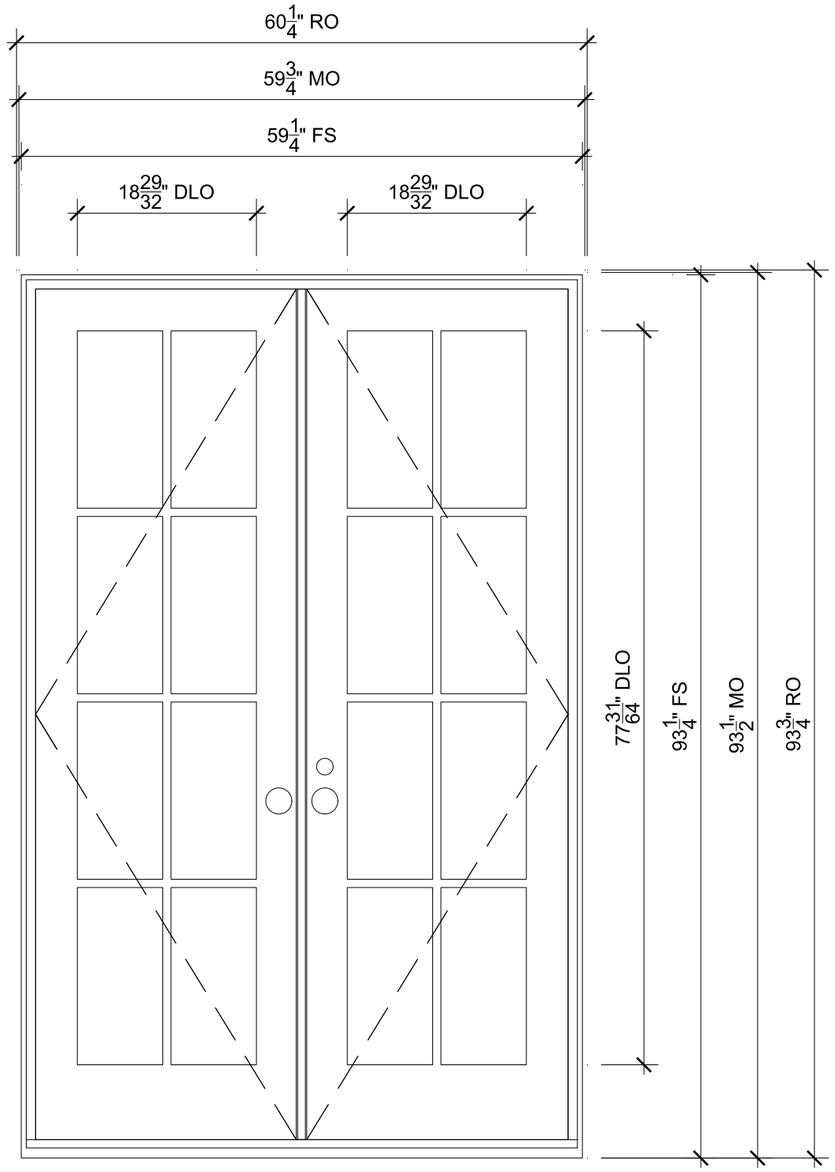

DOOR

SCALE: 3/4" = 1'-0"

2/6 Head
3/6 Jamb
4/6 Sill
5/6 Divided Lite
6/6 Meeting Stile

SPECIFICATIONS

Line #: 5
Qty: 1
Mark Unit: Door
Product Line: Ultimate
Unit Description: Inswing French Door G2
Rough Opening: 60 1/4" X 93 3/4"
Frame Size: 59 1/4" X 93 1/4"
Masonry Opening: 59 3/4" X 93 1/2"
Sash Opening: 60 1/4" X 93 3/4"
Inside Opening: 60 1/4" X 93 3/4"
Exterior Finish: Ebony
Species: Pine
Interior Finish: Painted Interior Finish - Designer Black
Unit Type: Inswing French Door G2, XX, Right Hand
Call Number: None
Glass Information: Tempered Low E2 w/Argon, Black
Divider Type: 7/8" Rectangular SDL W/ Spacer - Black
Hardware Type: Multi-Point Lock, Adjustable Hinges
Screen Type: No Screen
Hardware Color: Matte Black
Screen Surround Color: None
Screen Mesh Type: None
Shades: None
Jamb Depth: 6 9/16"
Interior Trim: None
Exterior Casing: Casing Type : None
Subsill: None

MARVIN

ORDERING PRODUCTS WITH REFERENCE TO SHOP DRAWINGS:
Before ordering the Marvin products illustrated within these shop drawings, a copy of these drawings accompanied by an approved signature of the purchaser must be returned to the Architectural Division at Marvin Windows & Doors, P.O. Box 100, Warroad, Minnesota 56763. If the Marvin products included herein are ordered without reference to the approved shop drawings, Marvin Windows and Doors assumes no responsibility in guaranteeing product coordination with the drawings.

PROJ/JOB: Marks Woods-DeThomas / 118 S Fayette Street Alexandria, VA
DIST/DEALER: WINDOW & DOOR SHOWPLACE-CIR
DRAWN: THOMAS FALLON
QUOTE#: SDFH7LH PK VER:0004.16.01 CREATED: 08/14/2025 REVISION:

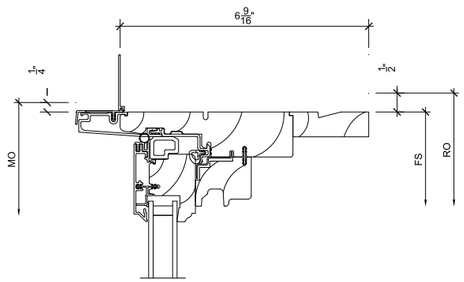

1/5 Head
SCALE: 3" = 1'-0"

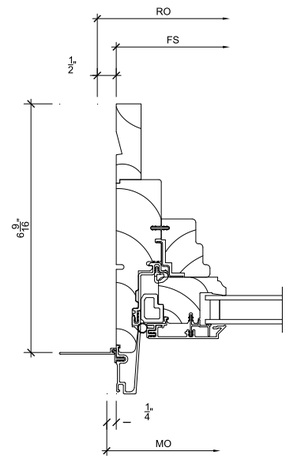

3/5 Jamb
SCALE: 3" = 1'-0"

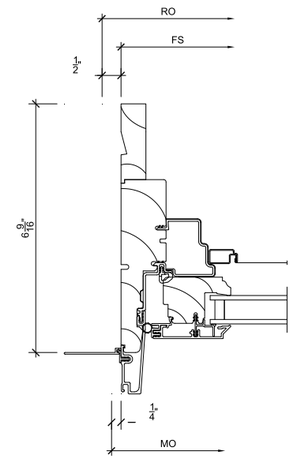

5/5 Jamb
SCALE: 3" = 1'-0"

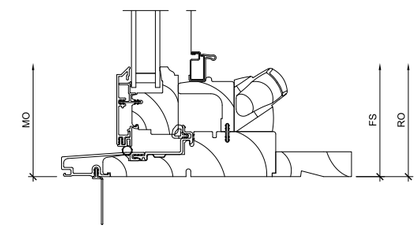

7/5 Sill
SCALE: 3" = 1'-0"

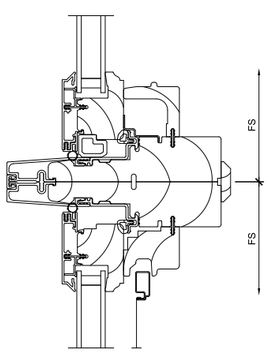

2/5 Horizontal Mullion
SCALE: 3" = 1'-0"

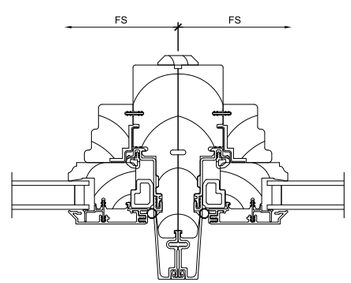

4/5 Vertical Mullion
SCALE: 3" = 1'-0"

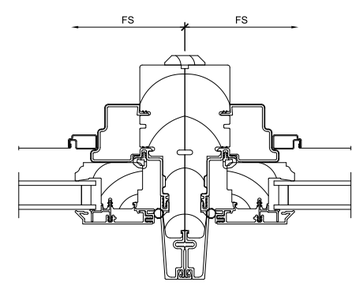

6/5 Vertical Mullion
SCALE: 3" = 1'-0"

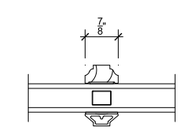

8/5 Divided Lite
SCALE: 3" = 1'-0"

MARVIN

ORDERING PRODUCTS WITH REFERENCE TO SHOP DRAWINGS:
Before ordering the Marvin products illustrated within these shop drawings, a copy of these drawings accompanied by an approved signature of the purchaser must be returned to the Architectural Division at Marvin Windows & Doors, P.O. Box 100, Warroad, Minnesota 56763. If the Marvin products included herein are ordered without reference to the approved shop drawings, Marvin Windows and Doors assumes no responsibility in guaranteeing product coordination with the drawings.

PROJ/JOB: Marks Woods-DeThomas / 118 S Fayette Street Alexandria, VA
DIST/DEALER: WINDOW & DOOR SHOWPLACE-CIR
DRAWN: THOMAS FALLON
QUOTE#: SDFH7LH PK VER:0004.16.01 CREATED: 08/14/2025 REVISION:

SHEET
5
OF 6

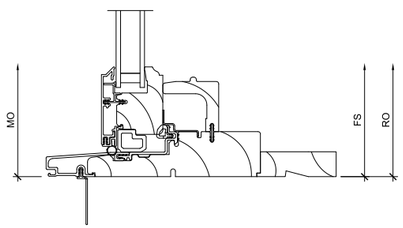

1 / 6 **Sill**

SCALE: 3" = 1'-0"

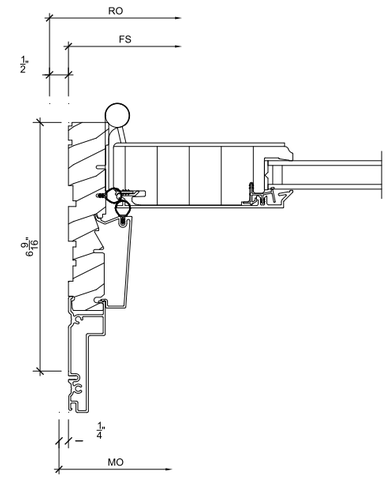

3 / 6 **Jamb**

SCALE: 3" = 1'-0"

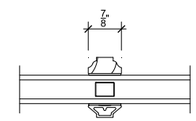

5 / 6 **Divided Lite**

SCALE: 3" = 1'-0"

7 / 6 **NOT USED**

SCALE: 3" = 1'-0"

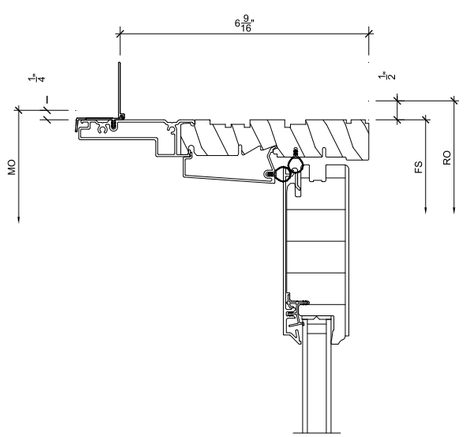

2 / 6 **Head**

SCALE: 3" = 1'-0"

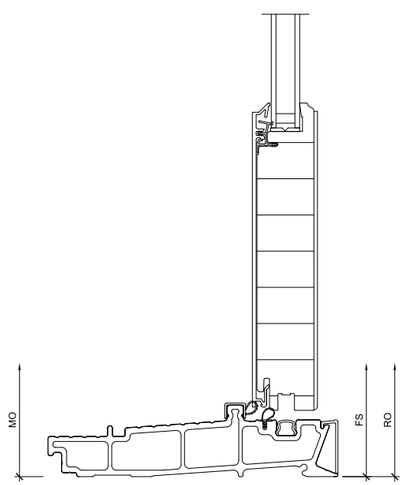

4 / 6 **Sill**

SCALE: 3" = 1'-0"

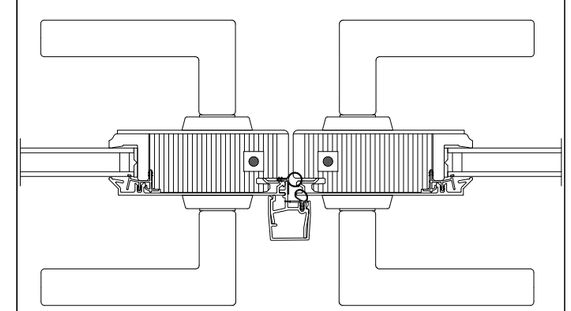

6 / 6 **Meeting Stile**

SCALE: 3" = 1'-0"

8 / 6 **NOT USED**

SCALE: 3" = 1'-0"

MARVIN

ORDERING PRODUCTS WITH REFERENCE TO SHOP DRAWINGS:
Before ordering the Marvin products illustrated within these shop drawings, a copy of these drawings accompanied by an approved signature of the purchaser must be returned to the Architectural Division at Marvin Windows & Doors, P.O. Box 100, Warroad, Minnesota 56763. If the Marvin products included herein are ordered without reference to the approved shop drawings, Marvin Windows and Doors assumes no responsibility in guaranteeing product coordination with the drawings.

PROJ/JOB: Marks Woods-DeThomas / 118 S Fayette Street Alexandria, VA
DIST/DEALER: WINDOW & DOOR SHOWPLACE-CIR
DRAWN: THOMAS FALLON
QUOTE#: SDFH7LH PK VER:0004.16.01 CREATED: 08/14/2025 REVISION:

SHEET 6 OF 6

118

SOUTH MOUNTAIN
Puron

118

SOUTH MOUNTAIN

118

118